





Roller screws

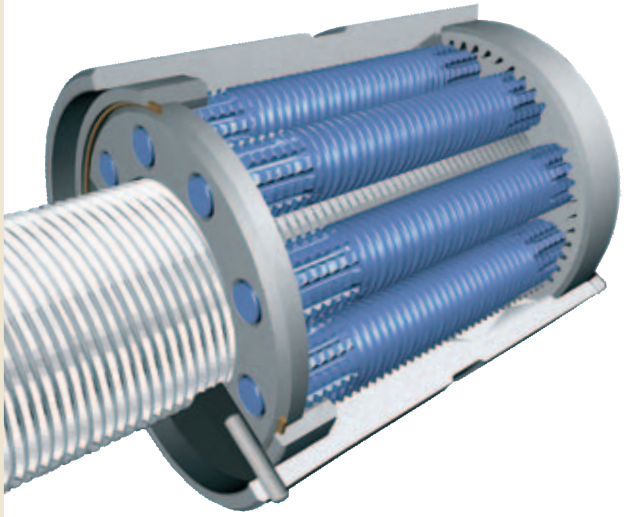

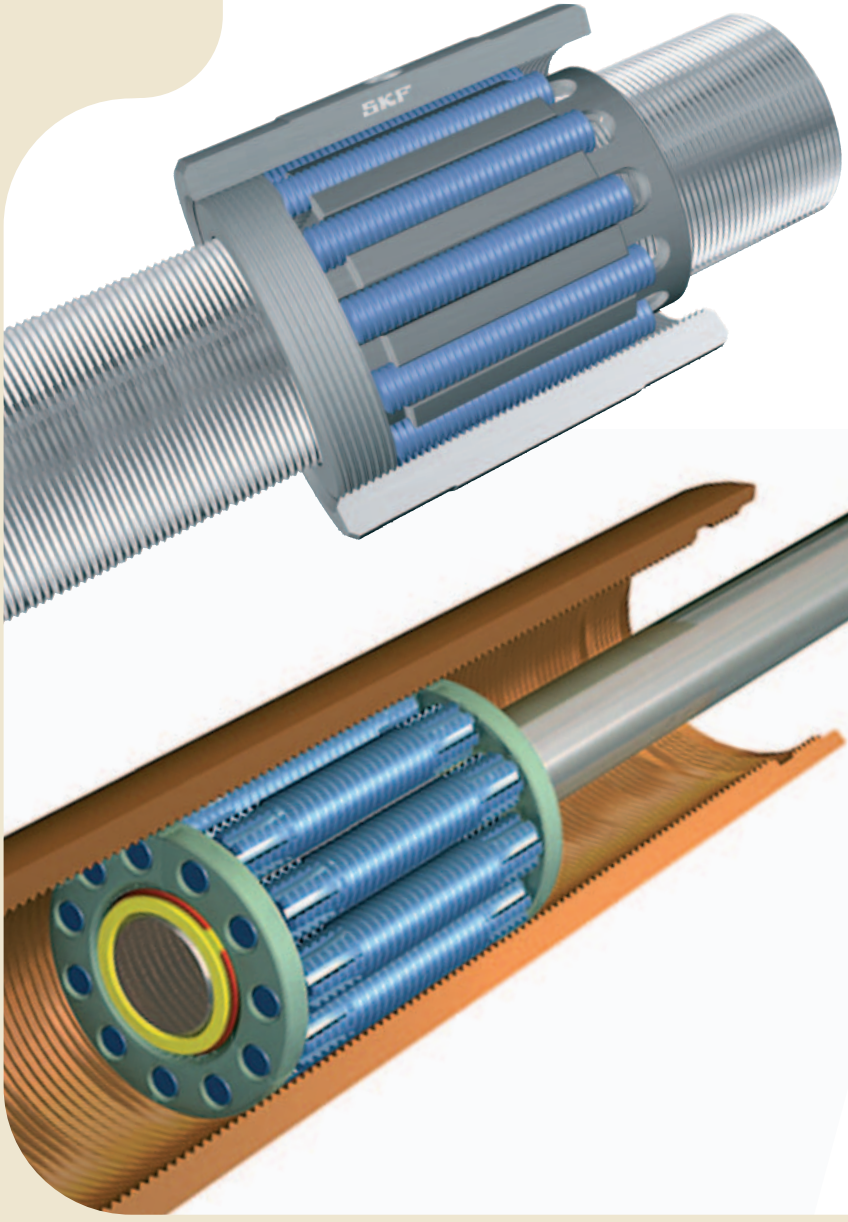

Servo_press

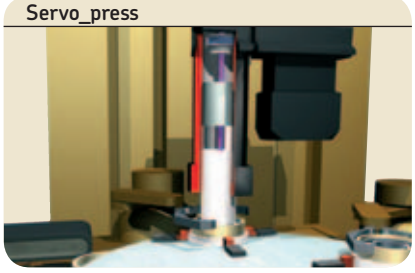

High tonnage press

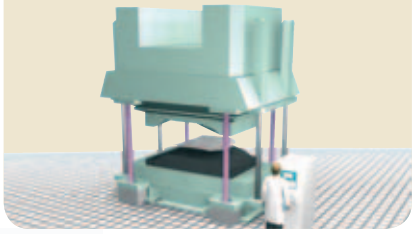

Glue gun

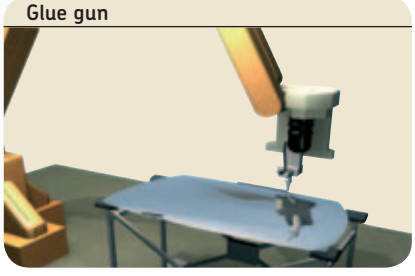

Painting gun

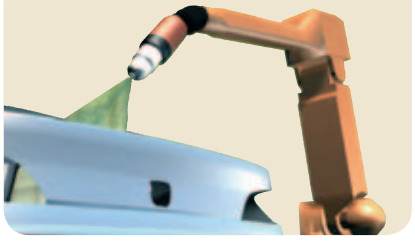

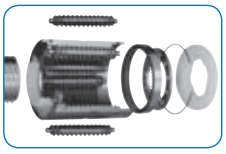

General

Overview: roller screw nuts 04
Comparing roller screws to ball screws 06
The principle of planetary roller screws 08
The principle of recirculating roller screws 09

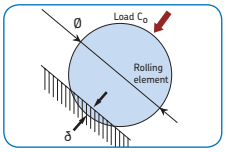

Recommendations for selection

Basic and static load rating 10
Critical rotating speed for screw shafts 11
Permissible speed limit 12
Lubrication 13
Efficiency and back-driving 14
Axial play and preload 15
Static axial stiffness 19
Screw shaft buckling 19
Materials and heat treatments 20
Shaft design 21

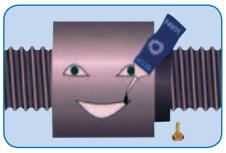

Recommendations for assembly

Radial and moment loads 23
Alignment 23
Lubrication 23
Designing the screw shaft ends 23
Starting-up the screw 23
Operating temperature 23



Other technical data

Lead precision according to ISO 24
Preload adjustment 26
Product inspection and certification 27

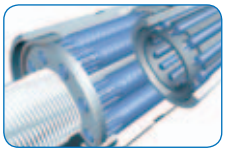

Product information

Service Range
Capabilities 28
Range details 30
Flanged thrust bearings, FLRBU 33

Standard Range
Planetary roller screws: technical data and dimensions 36
Recirculating roller screws: technical data and dimensions 62
Flanged thrust bearings, FLRBU 72

Ultra Power Range
Technical data and dimension 76

Electro-mechanical cylinders 80
SKF worldwide 83
Calculation formulas 84
Symbols 86
Ordering code 87

Overview: nuts for roller screws

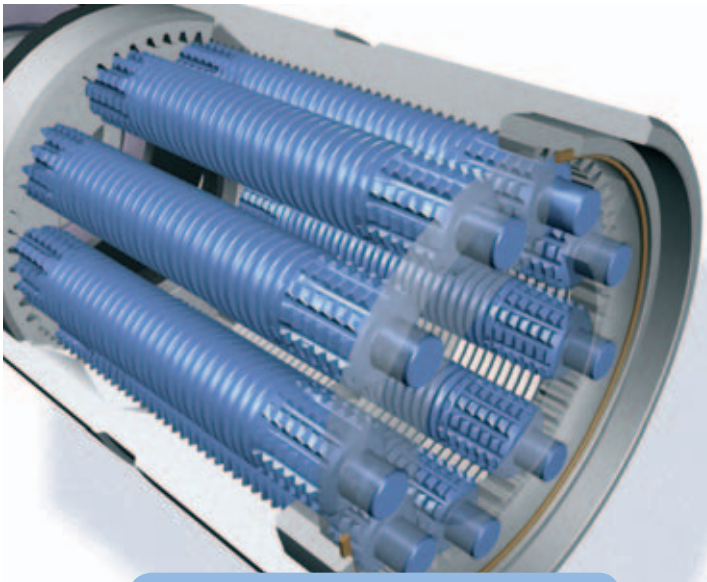

Planetary roller screws



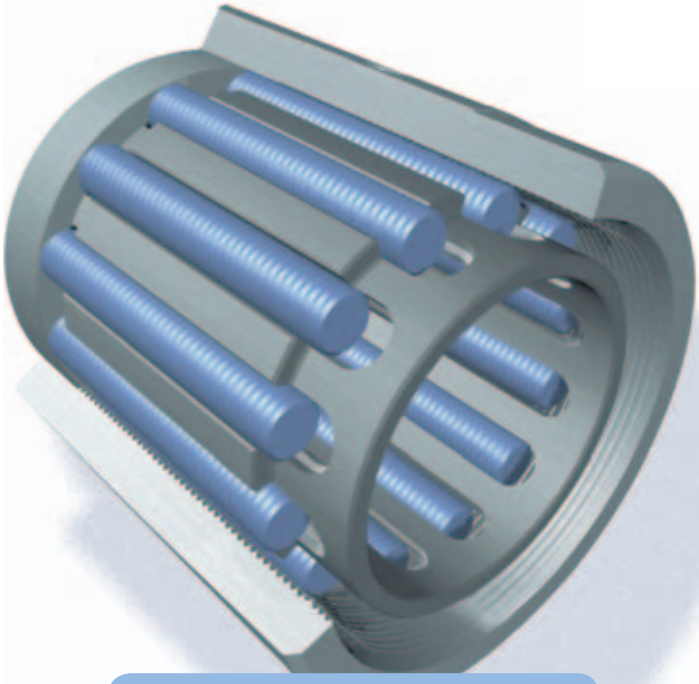

Recirculating roller screws

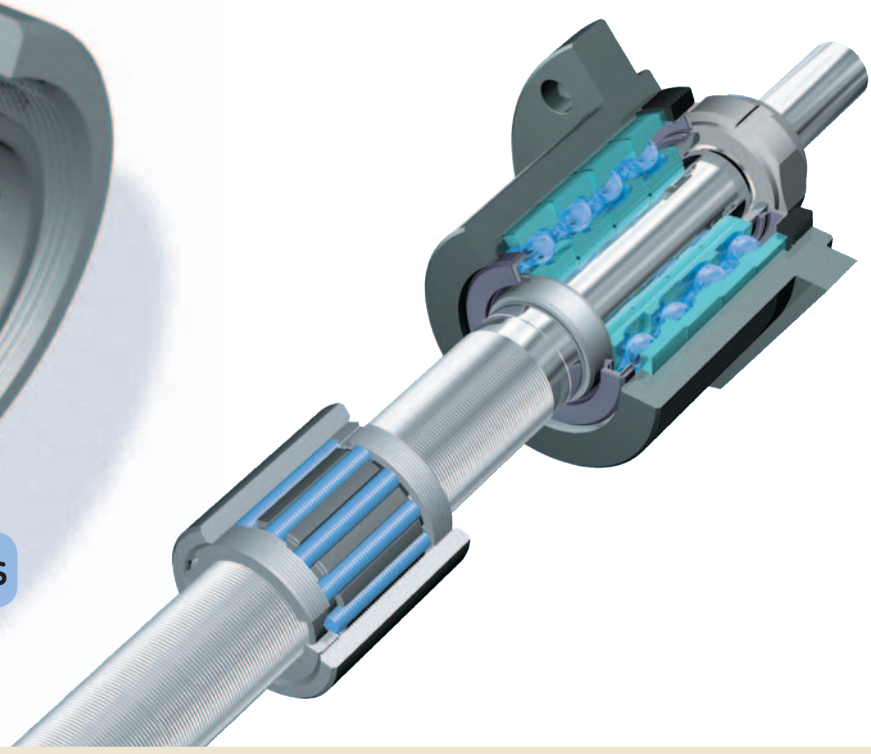



SRC, Cylindrical axial play
BRC, backlash elimination

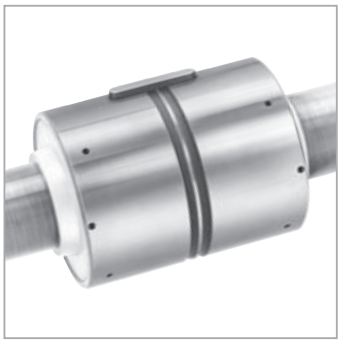

TRU/PRU
Cylindrical backlash elimination: TRU
Preloaded: PRU



SRF, Flanged axial play
BRF, backlash elimination



TRK/PRK
Flanged backlash elimination: TRK
Preloaded: PRK



SVC, Cylindrical axial play
BVC, backlash elimination



PVU
Cylindrical preloaded



SVF, Flanged axial play
BVF, backlash elimination



PVK
Flange preloaded

Comparing roller screws to ball screws

The load carrying capacity of a rolling screw depends practically on the surfaces at the points of contact:

- their diameter
- the number of contacts
- their hardness
- their surface finish
- the precision of the contacts to assure load sharing between them.

Ball screws

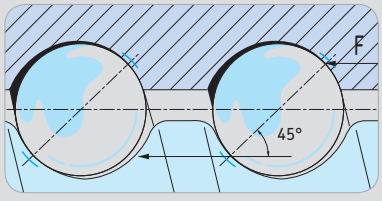

In ball screws, the load is transmitted from the nut to the shaft through the balls engaged in the groove.

In a single start ball screw, the ball diameter is limited to approximately 70 % of the lead: there is only a single helix of balls in a nut of given length so the number of contacts is small.

Roller screws

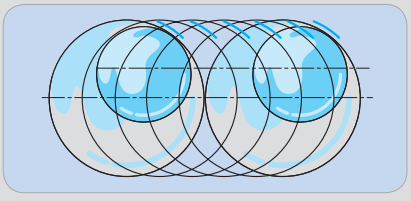

In roller screws, the load is transmitted from the nut to the shaft through the barrelled surfaces of all the engaged rollers.

The diameter of the contact surface is substantially increased as is the number of points of contact.

2 types of roller screws

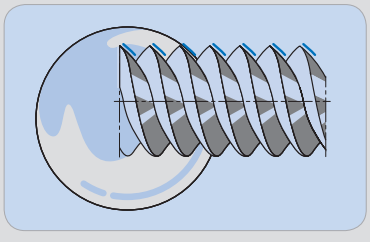

Planetary roller screw
Threaded rollers are the basis of "SR / BR / TR / PR" planetary roller screws.

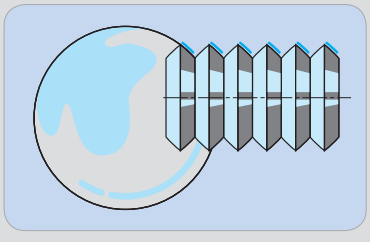

Recirculating roller screw
Grooved rollers are the basis of "SV /BV / PV" recirculating roller screws.

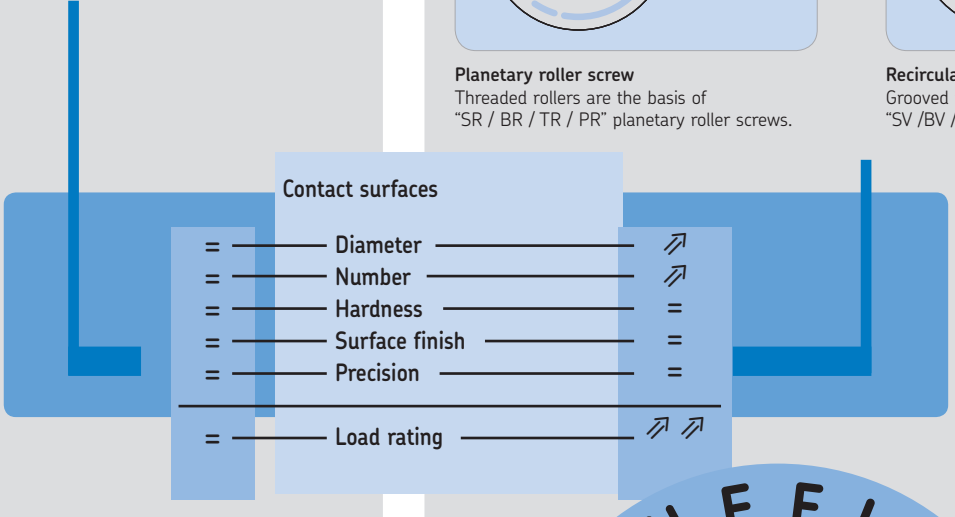

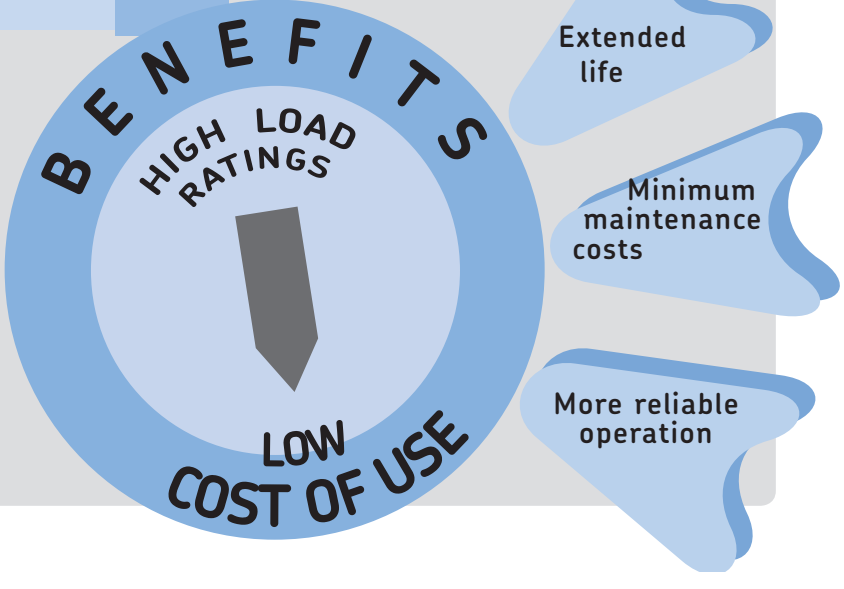

Break out from the limitations of ball screw performance

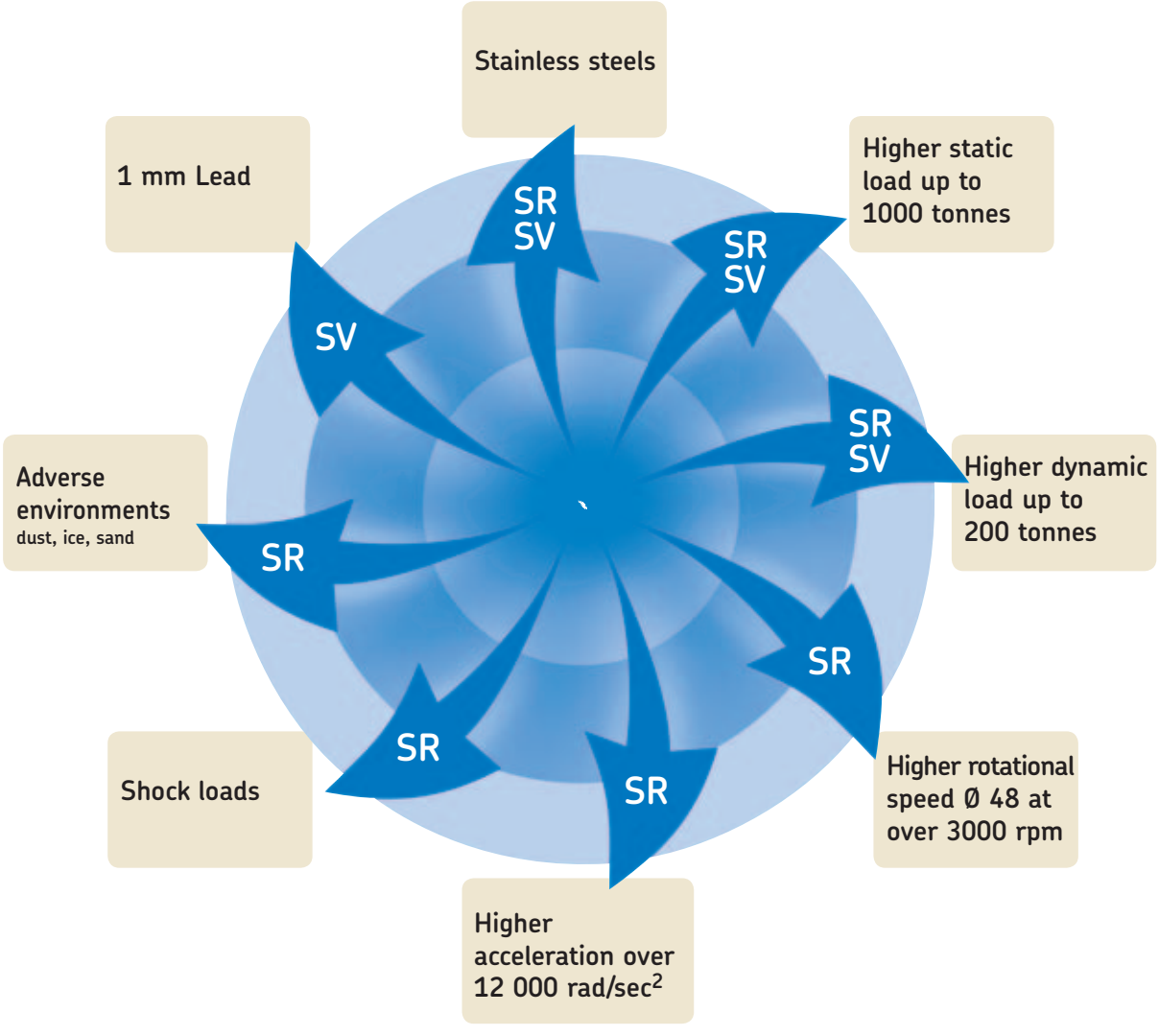

The 10 reasons for using roller screws

- High load ratings (SR-SV)
- Very high rotational speed (SR)
- High acceleration and deceleration rates (SR)
- Long life at high cycling rates (SR)
- High reliability (SR-SV)
- Resistance to hostile surroundings (SR)
- Ability to survive shock loads (SR)
- Small displacements with very good repeatability (SV)
- Rotating the nut when speed becomes critical (SR)
- Frequently removing the nut from the screw shaft (SR-most SV).

The principle of planetary roller screws

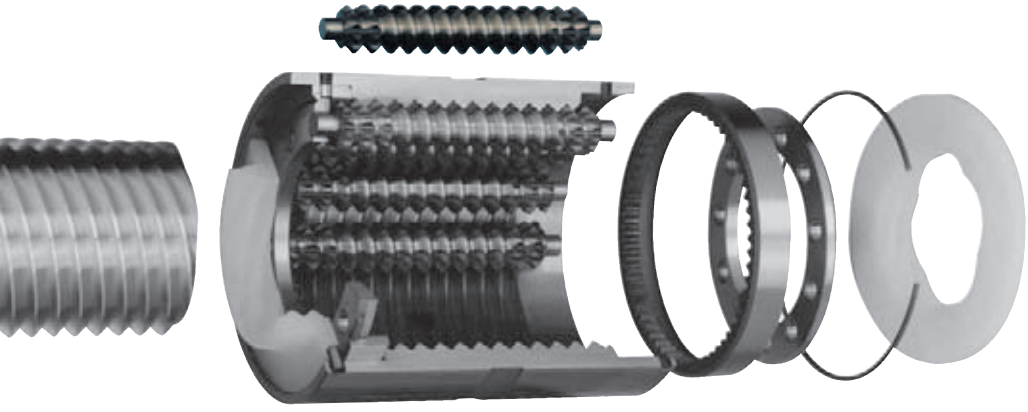

fig. 1

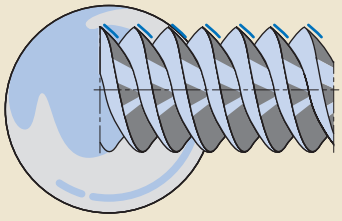

Threaded rollers are the basis of SR/BR/TR/PR planetary roller screws.

The specific qualities of SKF planetary roller screws

Many strong contact surfaces	High load carrying capacity	Long life
No recirculation and no contact between rolling elements	No weak points in the nut High rotation speed	Less fatigue Robust & shock resistant
Guided rollers	No loss in preload torque when changing direction	Smooth running
Timing mechanism	Exceptional reliability	Ability to work with ice, dirt or poor lubrication
Adaptable tooling	Non standard and left hand leads available	Tailor-made

All parts made “in house”, special steels possible

Typical applications

The capacity to carry heavy loads for thousands of hours in the most arduous conditions makes SR/BR/TR/PR planetary roller screws suitable for the most demanding applications. The robust nut can withstand shock loads and the timing mechanism ensures reliability even in harsh environments and at high accelerations; the long lead and the symmetrical design of the nut permit high linear speeds.

Examples:
- Plastic molding.
- Broaching machines.
- Valves.
- Presses
- Machine tools.
- The steel industry.
- The tyre industry.
- Automatic handling.
- Military aircraft, tanks, rocket launchers, radar, ships and submarines.
- The nuclear industry.

The principle of recirculating roller screws

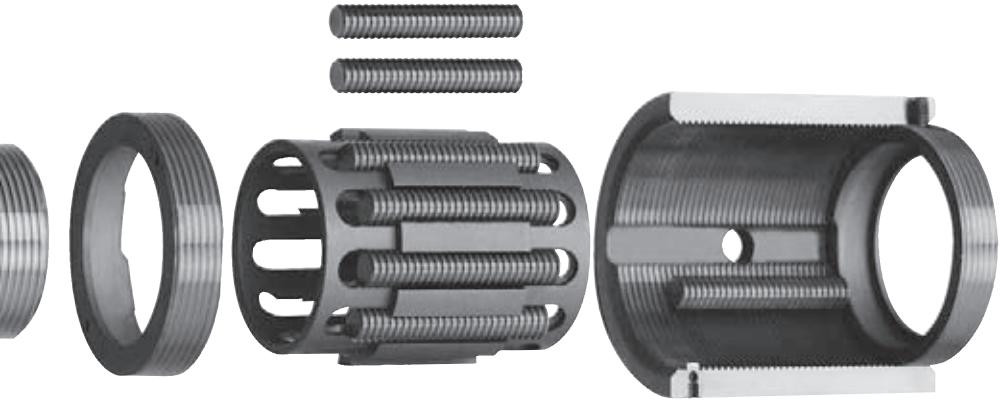

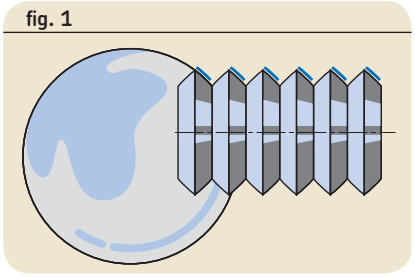

Grooved rollers are the basis of SV/BV/PV recirculating roller screws.

The specific qualities of SKF recirculating roller screws

Very small leads (1mm)	Fine resolution	Minimum drive torque	High mechanical advantage
No miniature parts	Simple	Robust	Reliable
Many strong contact points	Heavy load carrying capacity	High rigidity	Long life

All parts made “in house”, special steels possible

Typical applications

Ultimate positioning accuracy can be obtained using the fine lead of SV/BV/PV recirculating roller screws. Their great mechanical advantage minimizes input torque and increases resolution. They can simplify a complete transmission and improve its rigidity. They are often used in applications of advancing technology where reliable optimum performance is vital.

Examples:
- Grinding machines
- Laboratory equipment.
- Hospital equipment.
- Paper making
- The printing industry
- Telescopes
- Satellites

Recommendations for selection

Only basic selection parameters are included. To make the very best selection of a roller screw, the designer should specify such critical parameters as the load spectrum, the linear or rotational speed, the rates of acceleration and deceleration, the cycle rate, the environment, the required life, the lead accuracy, the stiffness, and any special requirement. If in doubt, please consult an SKF specialist before placing an order.

Basic dynamic load rating (C_a)

The dynamic rating is used to compute the fatigue life of roller screws. It is the axial load constant in magnitude and direction, and acting centrally under which the nominal life (as defined by ISO) reaches one million revolutions.

Nominal fatigue life L_{10}

The nominal life of a roller screw is the number of revolutions (or the number of operating hours at a given constant speed) which the roller screw is capable of enduring before the first sign of fatigue (flaking, spalling) occurs on one of the rolling surfaces (screw, nut or roller thread or groove).

It is however evident from both laboratory tests and practical experience that seemingly identical roller screws operating under identical conditions have different lives, hence the notion *of nominal life*.

It is, in accordance with ISO definition, the life achieved or exceeded by 90 % of a sufficiently large group of apparently identical roller screws, working in identical conditions (alignment, axial and centrally applied load, speed, acceleration, lubrication, temperature and cleanliness).

Service life

It is the actual life achieved by a specific roller screw before it fails. Failure is not only by fatigue (flaking or spalling); but also by inadequate lubrication and wear; wear of the recirculation system, corrosion, contamination, and, more generally, by loss of the functional characteristics required by the application.

Experience acquired with similar applications will help to select the proper screw to obtain the required service life. Also, one must take into account structural requirements such as the strength of screw ends and nut attachments, due to the loads applied on the elements in service. To attain L_{10} life performance a mean working load of up to 80 % of C_a is permitted.

In cases where more than 90 % probability of a screw attaining or exceeding its life is required.

% reliability	Adjusted life
90 %	$1{,}00 \times L_{10}$
95 %	$0{,}62 \times L_{10}$
96 %	$0{,}53 \times L_{10}$
97 %	$0{,}44 \times L_{10}$
98 %	$0{,}33 \times L_{10}$
99 %	$0{,}21 \times L_{10}$

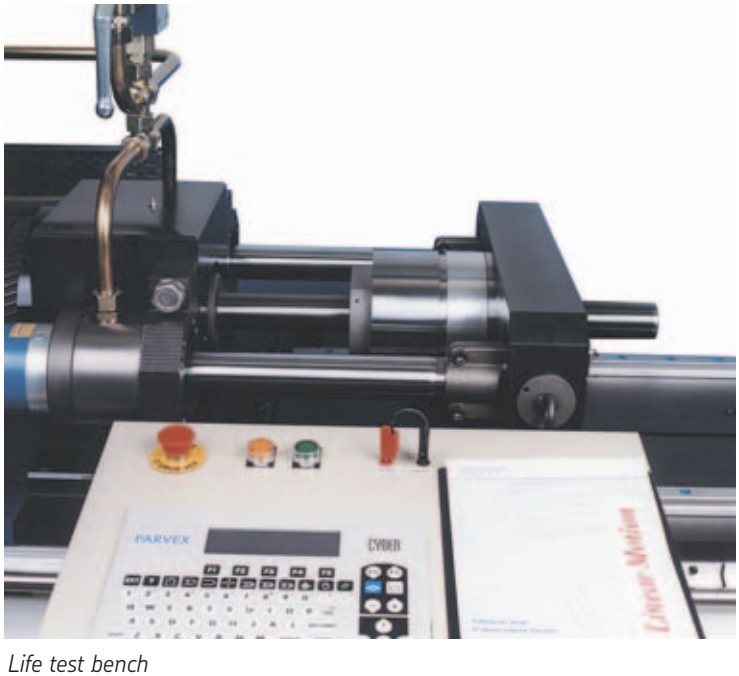

Life test bench

(1) SKF can help you to define this value in relation with the actual conditions of service.

Equivalent dynamic loads
The loads acting on the screw can be calculated according to the laws of mechanics if the external forces (e.g. power transmission, work, rotary and linear inertia forces) are known or can be calculated. It is necessary to calculate the equivalent dynamic load (see page 84).

Radial and moment loads must be taken by linear guiding systems. It is extremely important to resolve these problems *at the earliest conceptual stage*. These forces are detrimental to the life and the expected performance of the screw.

Fluctuating load
When the load fluctuates during the working cycle, it is necessary to calculate the equivalent dynamic load: this load is defined as that hypothetical load, constant in magnitude and direction, acting axially and centrally on the screw which, if applied, would have the same influence on the screw life as the actual loads to which the screw is subjected.

Additional loads due, for example to misalignment, uneven loading, shocks, and so on, must be taken in account.

Their influence on the nominal life of the screw is generally taken care of, consult SKF for advice.

Static load carrying capacity (C_{oa})

Roller screws should be selected on the basis of the static load rating C_{oa} instead of on life when they are submitted to continuous or intermittent shock loads, while stationary or rotating at very low speed for short duration.

The permissible load is determined by the permanent deformation caused by the load acting at the contact points.

It is defined by ISO standards as the purely axially and centrally applied static load which will create, by calculation, a total (rolling element + thread surface) permanent deformation equal to 0.0001 of the diameter of curvature of the rolling element. This deformation corresponds to a contact Hertz stress up to 4500 MPa depending on the screw diameter.

The roller screw must be selected by its basic static load rating which must be, at least, equal to the product of the maximum axial static load applied and a safety factor "s_o".

The safety factor is selected in relation with past experience of similar applications and requirements of running smoothness and noise level (1).

Critical rotating speed for screw shafts

The shaft is equated to a cylinder the diameter of which is the root diameter of the thread. The formulas (see page 84) use a parameter the value of which is dictated by the mounting of the screw shaft (whether it is simply supported or fixed).

As a rule the nut is not considered as a support of the screw shaft. Because of the potential inaccuracies in the mounting of the screw assembly, a safety factor of 0.80 is applied to the calculated critical speeds.

Calculations which consider the nut as a support of the shaft, or reduce the safety factor, require practical tests and possibly an optimization of the design (1).



(1) SKF can help you to define this value in relation with the actual conditions of service.

Permissible speed limit

The permissible speed limit is that speed which a screw cannot reliably exceed at any time. It is generally the limiting speed of the centrifugal forces in the nut. It is expressed as the product of the rpm and the diameter of the screw shaft (in mm).

The speed limits quoted in this catalogue (see page 84) *are the maximum speed that may be applied through very short periods* and in optimized running conditions of alignment, light external load and preload with monitored lubrication.

Running a screw continuously at the permissible speed limit may lead to a reduction of the calculated life of the nut mechanism.

⚠

High speed associated with high load requires a large input torque and yields a relatively short nominal life (1).

In the case of high acceleration and deceleration, it is recommended to either work under a nominal external load or to apply a light preload to the nut to avoid internal sliding during reversal.

The value of the preload of screws submitted to high acceleration is that preload which ensures the rolling elements do not slide (1).

Too high a preload will create unacceptable increases of the internal temperature.

Lubrication

The key point is the initial lubrication of the nut to lubricate all components. The lubrication of screws rotating at high speed must be properly considered in quantity and quality.

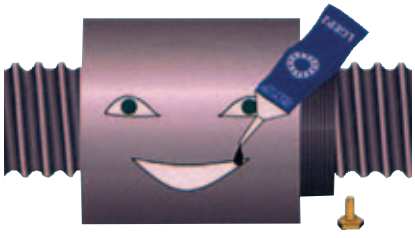

The volume, spread and frequency of the application of the lubricant (oil or grease) must be properly selected and monitored. At high speed the lubricant spread on the surface of the screw shaft may be thrown off by centrifugal forces. It is important to monitor this phenomenon during the first run at high speed and possibly adapt the frequency of re-lubrication or the flow of lubricant, or select a lubricant with a higher viscosity.

Monitoring the steady temperature reached by the nut permits the frequency of re-lubrication or the oil flow rate to be optimized.

Oil lubrication

A centralised recirculating oil system is ideal because it continuously changes the oil in the nut with cooled filtered oil from the reservoir. This system is prescribed when the temperature is likely to affect the positioning accuracy. The flow of oil can be regulated to optimise film thickness and removal of heat.

Selection of oil

Mineral oil normally used to lubricate other rotating parts such as bearings and gears may be used for the screw. The viscosity of the oil is defined by the speed, running temperature and load. The oil should have a viscosity of 100 ISO at the running temperature. An increase in viscosity or speed will increase the running temperature. At low speed (< 10 rpm) the viscosity should be 200 ISO at the running temperature. Under heavy load an EP additive to improve the film strength is recommended. Corrosion resistant and stabilizing additives may also be used to advantage.

Synthetic oils (PAO, ester) are advised for long life, high temperature.

Barium soap is advised under heavy load, low speed and when adhesion is required.

(1) SKF can help you to define this value in relation with the actual conditions of service.

Grease lubrication

Where oil lubrication is not practicable, the grease recommended for the support bearings of the screw may also be used for the screw.

After a few full strokes the grease will be spread evenly over the useful threaded length of the screw shaft, which will also help to protect the screw against corrosion. However the grease is open to the air.

To prevent dirt which may fall on it from entering the nut, wipers should be mounted in each end of the nut. Also the grease on the screw shaft will age more quickly than that in the screw support bearings so more frequent regreasing is needed, especially in a dirty environment. If the screw cannot be dismounted and cleaned before regreasing it is necessary to thoroughly clean the old grease from the screw shaft. This can be done with a spatula and then with a clean fluff proof cloth. To clean even more a cloth wetted with a solvent such as white spirit may be used. We do not advise using brushes to remove old or spread new grease (risk of bristles coming out). Apply also the new grease through the nut to push out the old from inside the nut.

The grease type is defined above all by the operating temperature, environment and load on the screw.

Speed, starting torque and chemical compatibility may also be taken into consideration.

Normally bearing greases of NLGI consistency 2 are used. A grease which is too hard at low temperature may restrict rotation or one which is too soft at high temperature may run off.

Selection of grease

Lithium base greases, for standard applications with EP-additives, are generally suitable for use from –30 °C to +110 °C.

A few can be used to +150 °C Lithium base greases are virtually insoluble in water and very work stable. However they absorb large quantities of water when worked to extremes.

Lubrication interval

The lubrication interval depends on the working cycle of the screw and whether the lubricant is polluted during use. General advice is difficult but the following will help you to define the interval. On start up check the grease quality regularly, for instance every month.

The first re-lubrication has to be done after roughly 50 000 revolutions under load, to remove all particles generated during running-in.

If the viscosity of the grease sample has increased, it needs replacing.

If the grease sample is darker than new it may indicate oxidation or the presence of metallic particles.

If it is discoloured, it is probably mixed with water.

It is helpful to take samples not only from the part of the screw where running has occured but also from unused parts of the screw where the grease acts as corrosion preventer.

(1) SKF can help you to define this value in relation with the actual conditions of service.

Quantity of lubricant

• Oil

We advise a quantity of 5 › 25 cm^3/h in shots of 0,1 cm^3 as an order of magnitude depending on the size of the screw and its running conditions.

• Grease

The total volume of grease needed for a new roller screw is the sum of the quantities needed for the screw shaft and the nut.

The volume of grease necessary for the screw shaft Z_s can be estimated from this formula:

$$Z_s = 4{,}4 \times 10^{-4}\, d_0 l_1$$

This quantity of grease should be spread over the whole threaded length of the shaft. The volume of grease for the nut Z_n is one third of the free volume in the nut.

The quantity Z_n is given in the dimension tables: it should be injected through the lubrication hole while turning the shaft.

Before applying load the nut should be run twice along the complete stroke to ensure grease is evenly spread.

Relubrication, *see also 'Grease lubrication'*

In the case of the existing grease being polluted, remove as much of it as possible and apply the same quantity as when first lubricated.

If the existing grease is clean add a volume Z_n /3 into the nut. Generally speaking, it is better to inject small quantity frequently than the contrary.

Efficiency and back-driving

The performance of a screw is mainly dependant on the geometry of the contact surfaces and their finish as well as the helix angle of the thread.

It is, also, dependant on the working conditions of the screw (load, speed, lubrication, preload, alignment, etc...).

The *"direct efficiency"* is used to define the input torque required to transform the rotation of one member into the translation of the other. Conversely, the *"indirect efficiency"* is used to define the axial load required to transform the translation of one member into the rotation of the other one. It is used, also, to define the braking torque required to prevent that rotation.

These screws are reversible or back-driveable under almost all circumstances. It is therefore necessary to design a brake mechanism if backdriving is to be avoided (gear reducers or brake).

Preload torque:

Internally preloaded screws exhibit a torque due to this preload. This persists even when they are not externally loaded. Preload torque is measured at 50 rpm when assembly is lubricated with ISO grade 64 oil.

Starting torque:

This is defined as the torque needed to overcome the following to start rotation:

a) the total inertia of all moving parts accelerated by the energy source (including rotation and linear movement).

b) the internal friction of the screw/nut assembly, bearing and associated guiding devices.

In general, torque to overcome inertia (a) is greater than friction torque (b).

The coefficient of friction of the high efficiency screw when starting μ_s is estimated at up to double the dynamic coefficient μ, under normal conditions of use.

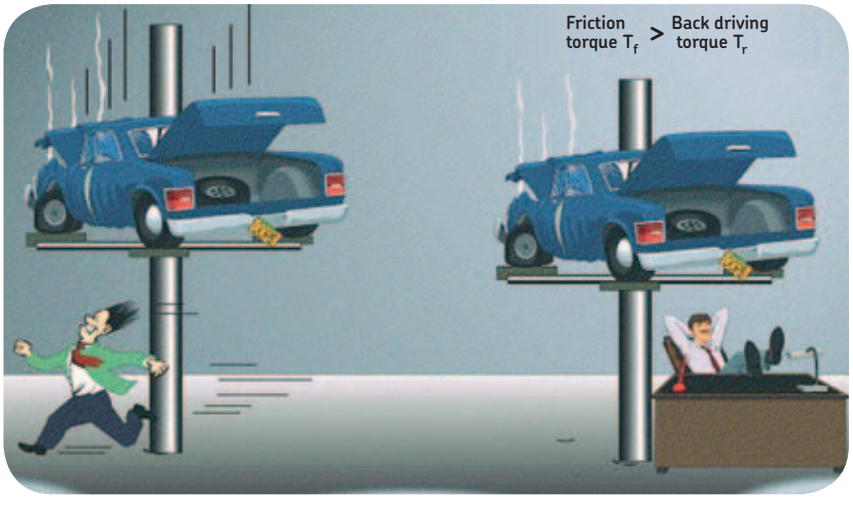

(1) SKF can help you to define this value in relation with the actual conditions of service.

Axial play and preload

Preloaded nuts are subject to much less elastic deformation than non-preloaded nuts.

Therefore they should be used whenever the accuracy of positioning under load and stiffness are important.

Preload, preload torque and rigidity

When a roller screw with a whole nut with axial play is measured on a tensile testing machine, a graph similar to (fig. 1) is obtained. One objective of preloading is to eliminate the axial play so that positioning accuracy is improved when the external load changes direction.

Planetary roller screws are available with play elimination using whole nut (designation: BR) or split nut (designation: TR).

In this case the preload torque will be between 0 and T_{pe} measured at 50 rpm when lubricated with ISO grade 68 oil.

Planetary and recirculating roller screws are also available preloaded for optimum rigidity: their designations are PR and PV. (fig. 2) shows how a squeeze load F_q is applied to the nut halves 1 and 2 of a split nut to obtain a preload F_{pr} . One part of this load is used to generate the preload force and the other one to squeeze the spacer.

The preload spacer is ground to give the correct preload torque when the specified squeeze load is applied. Before the external load is applied the two nut halves are in equilibrium at A (fig. 4) under a load F_{pr} .

When an external load F (fig. 3) is applied the loads on the nut halves become F_1 and F_2.

For all conditions where $F \leq 2{,}83\ F_{pr}$ the load seen by nut half 2 is greater than the external load so increasing the preload reduces the life of the screw. When the external load reaches $2{,}83\ F_{pr}$ nut half 1 is unloaded and $F_2 = F$. Roller screws are normally preloaded by preloading one nut half against the other so only one half supports the external load in a given direction. In this case, nut half 2 is taking the external load. The load carrying capacity and rigidity of a split preloaded nut are substantially less than a whole nut.

Because of the very high load capacity and rigidity of roller screws a split nut is sufficient for most applications and offers an extremely compact design.

fig. 1

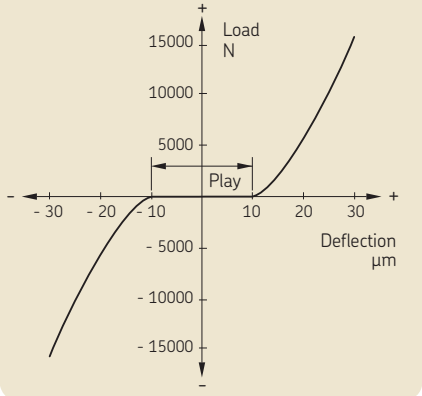

fig. 2

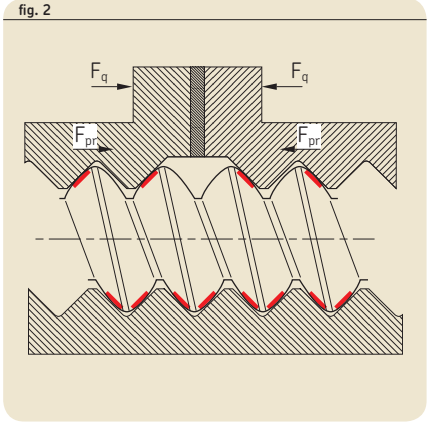

fig. 3

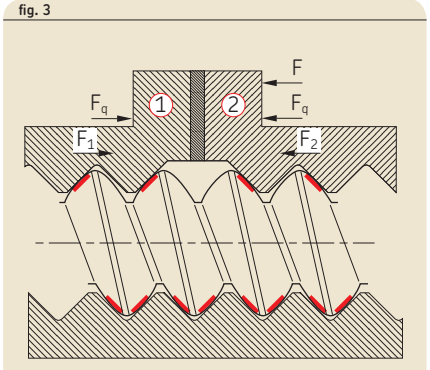

fig. 4

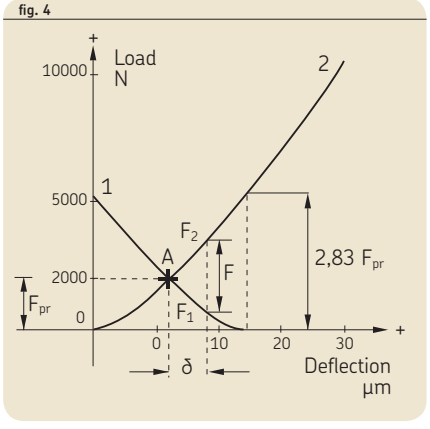

Figure 5 compares the load/deflection characteristics of three different nut combinations:
Curve 1. Whole nut with axial play
Curve 2. Preloaded split nut
Curve 3. Preloaded double nut.

Backlash elimination can be achieved by fitting oversize rollers in one-piece nut (BRC-BVC) which allows to keep high load capacities.

In exceptional cases where the load rating of a split nut is not sufficient two whole cylindrical nuts may be preloaded together (fig. 6). Exact dimensions are available on request: please contact SKF.

The squeeze load applies a compressive preload in all cases: this ensures more rigidity of the roller screw compared to a preload in extension.

Preload torque is the torque resulting from the preload, F_{pr}. The preload torque is calculated from the nominal preload assuming a real efficiency of 90 % of the theoretical direct efficiency (page 85).

The preload torque,

$$T_{pr} = \frac{F_{pr}\, P_h\, 10^{-3}}{\pi} \left(\frac{1}{\eta_p} - 1 \right)$$

fig. 5

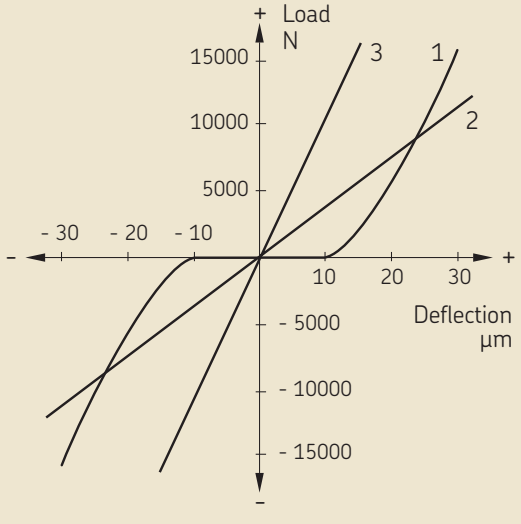

fig. 6

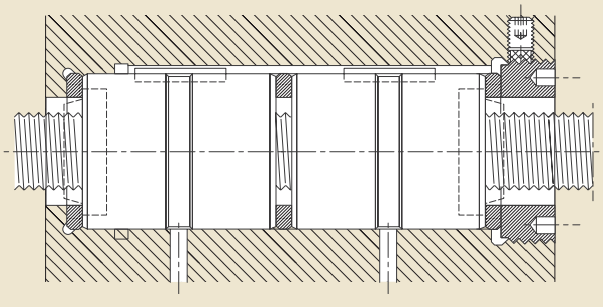

Preload torque tolerances

For each roller screw, preloaded for optimum rigidity a range of value of preload torque , T_{pr} is given in the technical data. The customer is free to choose any value in this range: if no value is specified on the order the mean value will be taken. A typical preload torque graph is shown on page 18: they can be obtained on request when ordering.

The reference R_{nr} value of rigidity correspond to this mean preload torque value.

The tolerance of variation of preload torque as the nut moves along the length of the screw depends on the helix angle of the screw thread, the slenderness of the screw shaft and the lead precision. The tables give the tolerances of preload torque variation. Refer to A if the helix angle, α is less than 11° and B if it is more.

Preload torque is measured at 50 rpm with ISO grade 68 oil for SR/TR/PR screws and with ISO grade 220 oil for SV/PV screws.

A. Tolerance of preload torque for screws with α < 11°

	$l_1/d_0 \leq 40$ and $l_1 \leq 4000$			$l_1/d_0 \leq 60$ and $l_1 \leq 4000$		
Tpr Nm	**G1** ±%	**G3**	**G5**	**G1**	**G3**	**G5**
≤0,2	35	40	50	40	50	60
(0,2) - 0,6	25	30	35	30	35	40
(0,6) - 1,0	20	25	30	25	30	35
(1,0) - 2,5	15	20	25	20	25	30
(2,5) - 6,3	10	15	20	15	20	25
(6,3) - 10,0	10	10	15	15	15	20

B. Tolerance of preload torque for screws with α ≥ 11°

	$l_1 \leq 2000$		$2000 \leq l_1 \leq 4000$	
Tpr Nm	**G3** ±%	**G5**	**G3**	**G5**
0 - 10,0	70	80	80	90

Planetary roller screws preloaded for optimum rigidity with α ≥ 11° are not available in G1 lead precision.

Example:

A PRK 48 × 10 with threaded length 600 mm. The range of preload torque is 1,24 › 2,47 Nm. What is the tolerance of preload torque for G3 lead precision ?

The minimum guaranteed nut rigidity is 760 N/µm and the reference value is 980 N/µm. To obtain these the mean value of preload torque is specified: 1,855 Nm. The helix angle α is 3,79°.

Table A gives ±20 % for G3. All screws will be within the tolerance 1,855 ±20 % or 1,484 › 2,226 Nm.

If for reasons of motor torque limitations the minimum preload torque 1,24 Nm is chosen. The tolerance becomes 1,24 ±20 % or 0,99 › 1,49 Nm and the preload and minimum guaranteed and reference values of rigidity are not valid.

Two typical examples are shown.

fig. 1

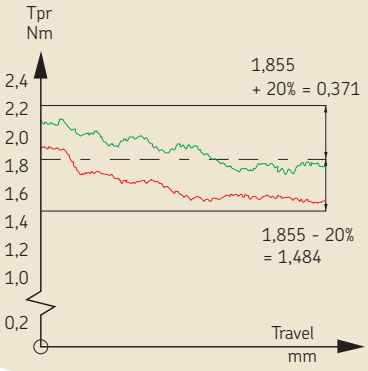

fig. 2

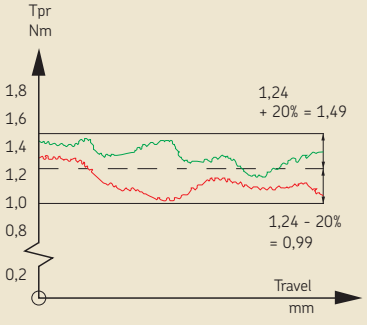

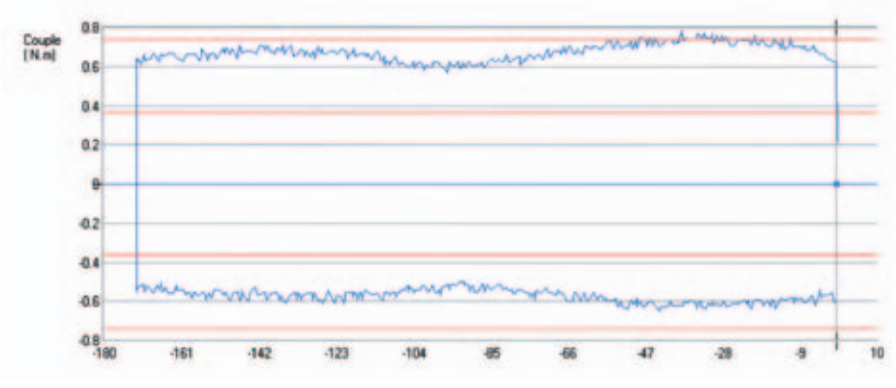

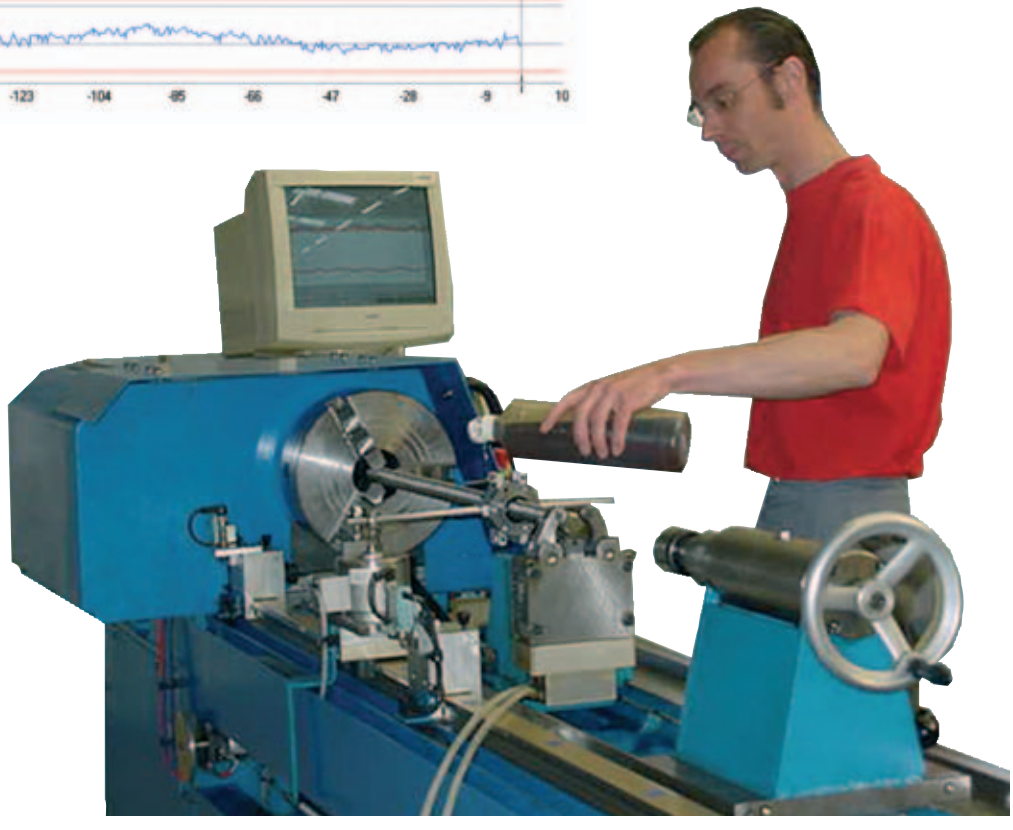

Preload test bench

Static axial stiffness of a complete assembly

It is the ratio of the external axial load applied on the system and the axial displacement of the face of the nut in relation with the fixed (anchored) end of the screw shaft. The inverse of the *rigidity of the total system* is equal to the sum of all the inverses of the rigidity of each of the components (screw shaft, nut as mounted on the shaft, supporting bearing, supporting housings, etc...).

$$\frac{1}{R_t} = \frac{1}{R_s} + \frac{1}{R_n}$$

Because of this, the rigidity of the total system is always less than the smallest individual rigidity.

Nut rigidity: R_n
When a preload is applied to a split nut, firstly, the internal play is eliminated, then, the Hertzian elastic deformation increases as the preload applied so that the overall rigidity increases.

The theoretical deformation does not take into account machining inaccuracies, actual sharing of the load between the different contact surfaces, the elasticity of the nut and of the screw shaft. The practical stiffness values given in the catalogue are lower than the theoretical values for this reason.

They are determined by SKF based on the value of the selected basic preload and an external load equal to twice this preload.

Shaft rigidity: R_s
The elastic deformation of screw shaft is proportional to its length and inversely proportional to the square of the root diameter.

According to the relative importance of the screw deformation (see rigidity of the total system), too large an increase in the preload of the nut and supporting bearings yields a limited increase of rigidity and notably increases the preload torque and therefore the running temperature.

Consequently, the preload stated in the catalogue for each dimension is optimum and should not be increased.

$$R_s = 165 \frac{d_2^2}{l} \text{ (N/µm)}$$

for standard steel
see fig. 1

$$R_s = \frac{165\, d_2^2\, l}{l_2\ (l - l_2)}$$

for standard steel
see fig. 2

fig. 1

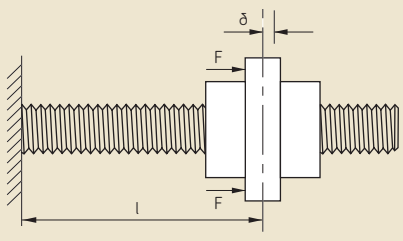

fig. 2

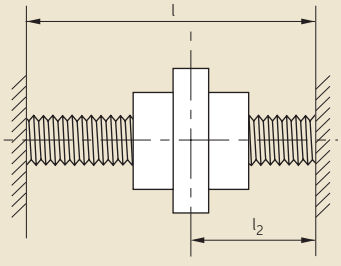

Screw shaft buckling

The column loading of the screw shaft must be checked when it is submitted to compression loading (whether dynamically or statically).

The maximum permissible compressive load is calculated using the Euler formulas. It is then multiplied by a safety factor of 3 to 5, depending on the application.

The type of end mounting of the shaft is critical to select the proper coefficients to be used in the Euler formulas.

When the screw shaft comprises a single diameter, the root diameter is used for the calculation. When the screw comprises different sections with various diameters, calculations become more complex (1).

(1) SKF can help you to define this value in relation with the actual conditions of service.

Materials and heat treatments

Standard screw shafts are machined from pretreated 42 CrMo4.

Tensile strength, MPa	850 MPa
Yield stress (Rp 0,2 %)	650 Mpa up to 12,5 mm radially from outside. 550 MPa more than 12,5 mm radially from outside.

Then the Transrol thread is surface hardened by induction.

Standard nuts are machined in 100Cr6 steel which is through hardened. Hardness of the contact surfaces is 56-60 HRc.

Most assemblies made of stainless material have a surface hardness in the range 42 to 58 HRc: the load rating of the catalogue therefore must be derated respectively to C'_a and C'_{oa} C'_a and C'_{oa} being the capacities with the new hardness in Vickers (Hv).

$$C'_a = C_a \times \left(\frac{Hv}{654}\right)^2$$

$$C'_{oa} = C_{oa} \times \left(\frac{Hv}{654}\right)^3$$

fig. 1

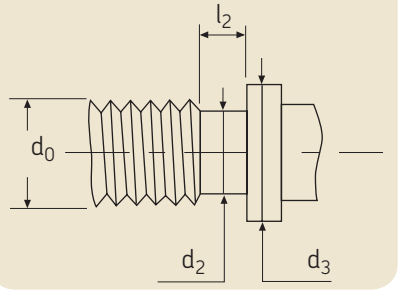



Through hardening treatment

Working environment

Our products have not been developed for use in an explosive atmosphere, consequently we cannot take any responsibility for their use in this field.

NOTE: 42 CrMo4, an AFNOR reference is similar to AISI 4140; 100Cr6 is similar to AISI 52100.



Induction hardening

Shaft Design

It is possible to deliver roller screws with *one* end larger than the outside diameter, d_1 of the shaft. To grind the thread efficiently an undercut at root diameter d_2 and length l_2 is needed (fig. 1).

- When $d_3 \leq 1{,}3\ d_1$

SR/BR/TR/PR
Ph ≤ 8 mm, $l_2 \geq 12$ mm
Ph > 8 mm, $l_2 \geq 1{,}4$ Ph

SV/BV/PV
Ph = 1
+ 40 × 2, 50 × 2, 63 × 2 } $l_2 \geq 12$ mm
All others $l_2 \geq 14$ mm

- When $d_3 \geq 1{,}3\ d_1$, contact SKF

Zone A.
Torsion only

The nominal shear stress τ caused by the drive torque T is given by:

$$\tau = \frac{16\ T}{\pi\ d_5^{\ 3}}$$

This is increased by a stress concentration factor f_4 to give the real shear stress, τ_p

$$\tau_p = f_4 \tau$$

According to Von Mises the total stress, σ_t

$$\sigma_t = 1{,}73\ \tau_p$$

For safety σt should be less than 67 % of the 0,2 % proof stress of the steel.

If the end diameter d_5 includes a keyway of depth e calculate with $(d_5 - e)$.

The angle of twist of the screw shaft is given by

$$\theta = \frac{0{,}0648\ Tl}{d_o^{\ 4}}$$

The linear positioning error, δ, caused by this twist

$$\delta = \frac{P_h\ \theta}{360}$$

Zone B.
Axial + torsional stresses

The nominal axial stress caused by the axial load F is given by

$$\sigma = \frac{4F}{\pi d_4^{\ 2}}$$

This is increased by a stress concentration factor f_5 to give the real principal stress σ_p

$$\sigma_p = f_5\ \sigma$$

as above

$$\tau_p = f_4 \tau$$

According to Von Mises the total stress σ_t

$$\sigma_t = (\sigma_p^{\ 2} + 3\ \tau_t^{\ 2})^{1/2}$$

For safety σ_t should be less than 67 % of the 0,2 % proof stress of the steel.

fig. 1

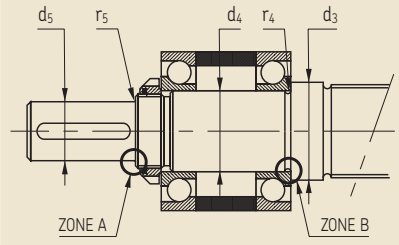

Strength of machined ends

The end machining of a roller screw is designed by the customer. Due to the high static and dynamic load ratings of roller screws it is important to check the strength of the machined ends.

This checking must be your responsibility unless you specifically ask SKF.

This simple approach takes into account the different diameters of the end where stress concentration factors must be used: it takes into consideration only axial and torsional stresses.

Nota: Stress concentration factors f_4 and f_5 are available in all general mechanical literature.

Manufacturing precision

Generally speaking, the precision indication given in the designation defines the lead precision: see page 24.

Lead precision according to ISO (ex. G1 - G5...).

Parameters other than lead precision correspond to our internal standards (generally based on ISO 3408-3 class 5).

If you require special tolerances (for example class 1 or 3) please specify when requesting a quotation or ordering.

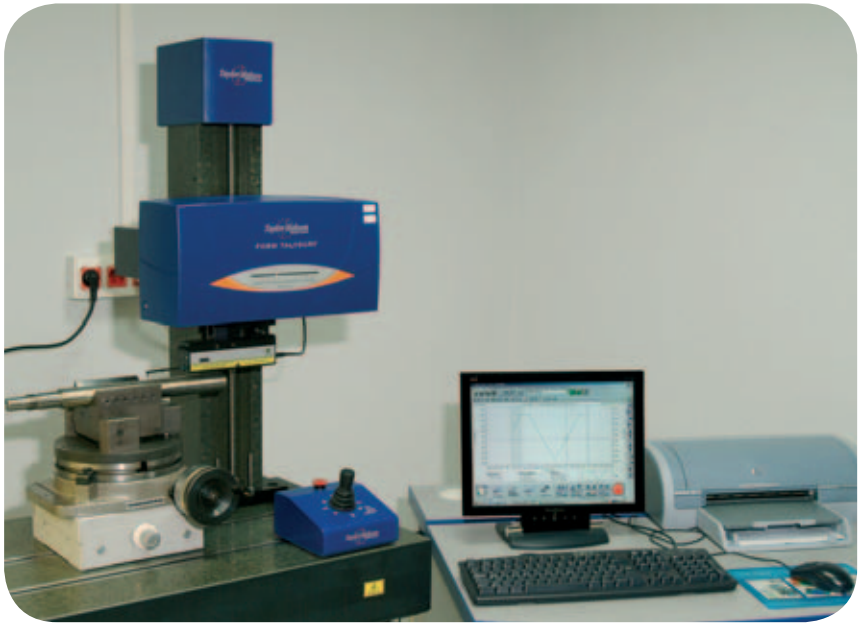

Inspection of surface finish



Lead error control interferometric test bench

Recommended assembly procedure

Roller screws are precision components and should be handled with care to avoid shocks. When stored out of the shipping crate they must lie on wooden or plastic vee blocks and should not be allowed to sag.

Screw assemblies are shipped in a carboard/wooden crate, wrapped in a sealed plastic bag which protects them from foreign material and possible pollution. They should stay wrapped until they are used.

Radial and moment loads
Any radial or moment load on the nut will overload some of the contact surfaces, thus significantly reducing its life. (fig. 1)

Alignment
SKF linear guidance components should be used to ensure correct alignment and avoid non-axial loading. The parallelism of the screw shaft with the guiding devices must be checked.

If external linear guidance prove impractical, we suggest mounting the nut on trunnions or gimbals and the screw shaft in self-aligning bearings.

Mounting the screw in tension helps align it properly and eliminates buckling.

Lubrication
Good lubrication is essential for the proper functioning of the screw and for its long term reliability (1), (see fig. 2).

Before shipping, the screw is coated with a protective fluid that dries to a film. *This protective film is not a lubricant.*

Depending on the selected lubricant, it may be necessary to remove this film before applying the lubricant (there may be a risk of non-compatibility).

If this operation is performed in a potentially polluted atmosphere it is highly recommended to proceed with a thorough cleaning of the assembly.

Designing the screw shaft ends
Generally speaking, when the ends of the screw shaft are specified by the customer's engineering personnel, it is their responsability to check the strength of these ends.

Roller screws can be supplied with one end bigger than the diameter of the threaded portion. The core strength of such an end may be affected by large reductions of diameter. When this concept of a large end is used, a minimum length at root diameter is needed between the end of the thread and the face of the larger diameter.

Starting-up the screw
After the assembly has been cleaned, mounted and lubricated, it is recommended that the nut is allowed to make several full strokes at low speed; to check the proper positioning of the limit switches or reversing mechanism before applying the full load and the full speed.

Operating temperature
Screws made from standard steel (see page 20) and operating under normal loads can sustain temperatures in the range -20 °C to +110 °C.

Between 110 °C and 130 °C, SKF must be notified so that it adapts the annealing procedure and checks that the application can be successful with a hardness below the standard minimum value.

Above +130 °Celsius, steels adapted to the temperature of the application should be selected, which could decrease the load rating.

Consult SKF for advice.

NOTE:
Operating at high temperature will lower the hardness of the steel, alter the accuracy of the thread and may increase the oxidability of the materials.

fig. 1

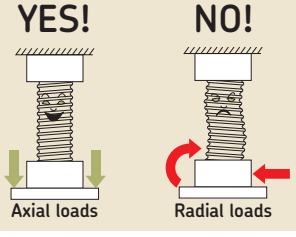

fig. 2

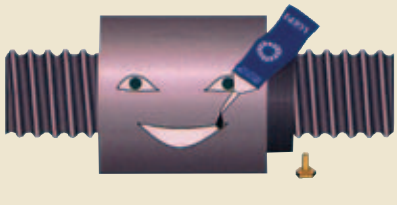

(1) SKF can help you to define this value in relation with the actual conditions of service.

Lead precision according to ISO

Lead precision is measured at 20 °C on the useful stroke l_u, which is the threaded length decreased, at each end, by the length l_e equal to the screw shaft diameter.

V_{300p} µm			**G1** 6		**G3** 12		**G5** 23	
l_u mm			e_p µm	v_{up}	e_p	v_{up}	e_p	v_{up}
0	-	315	6	6	12	12	23	23
(315)	-	400	7	6	13	12	25	25
(400)	-	500	8	7	15	13	27	26
(500)	-	630	9	7	16	14	32	29
(630)	-	800	10	8	18	16	36	31
(800)	-	1000	11	9	21	17	40	34
(1000)	-	1250	13	10	24	19	47	39
(1250)	-	1600	15	11	29	22	55	44
(1600)	-	2000	18	13	35	25	65	51
(2000)	-	2500	22	15	41	29	78	59
(2500)	-	3150	26	17	50	34	96	69
(3150)	-	4000	32	21	62	41	115	82
(4000)	-	5000			76	49	140	99
(5000)	-	6300					170	119



Lead accuracy control on a complete assembly over one revolution

l_u = useful travel
l_e = excess travel (no lead precision required)
l_o = nominal travel
l_s = specified travel
c = travel compensation (difference between ls and lo to be defined by the customer, for instance to compensate for expansion)
e_p = tolerance over the specified travel
V = travel variation (or permissible band width)
V_{300p} = maximum permitted travel variation over 300 mm
V_{up} = maximum permitted travel variation over the useful travel l_u
V_{300a} = measured travel variation over 300 mm
V_{ua} = measured travel variation over the useful travel

fig. 1

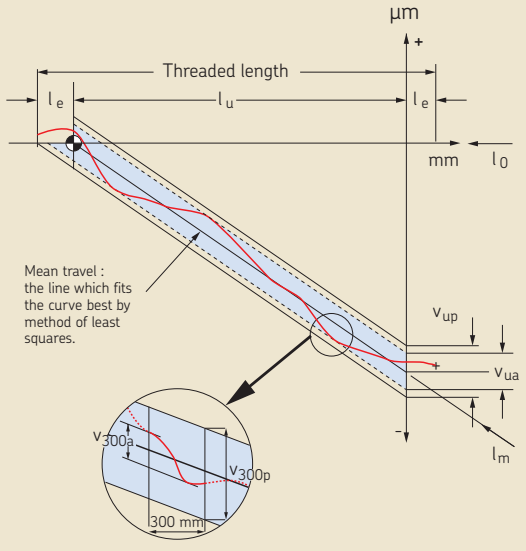

Case with value of c specified by the customer.

fig. 2

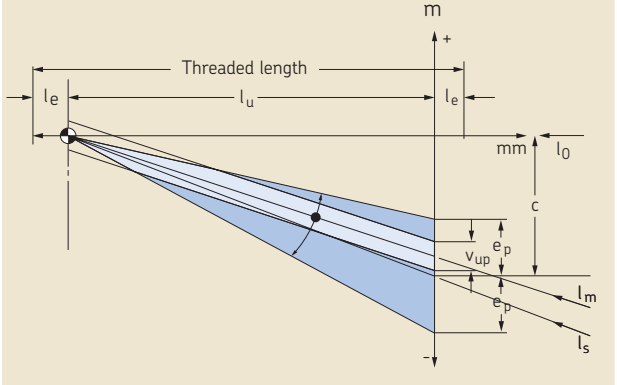

Case with c = 0 = standard version in case of no value given by the customer.

fig. 3

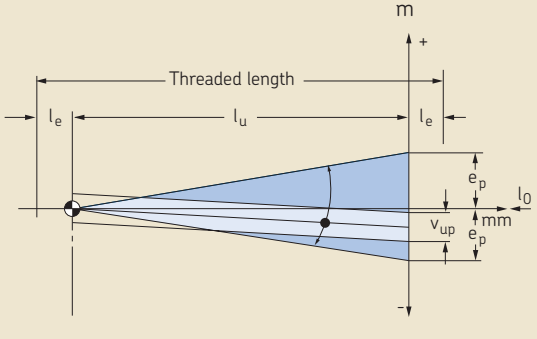

4

Preload adjustment

Cylindrical nuts

In the case of cylindrical nuts (types TRU and PRU for planetary roller screws - type PVU for recirculating roller screws), the threaded housing stoppers must be tightened to the values shown into tables 1 and 2 below. These torques can also be used with one-piece nuts (SRC - BRC - SVC - BVC).

Table 1

SRC/BRC/TRU/PRU

	Housing stopper thread	Tightening torque	Squeeze load
d_0	mm	Nm	N
8	30 × 1.0	20	2700
12	35 × 1.0	35	4100
15	40 × 1.0	45	4600
21	50 × 1.0	65	5500
25	60 × 1.0	80	5500
30	70 × 1.5	100	5900
39	90 × 1.5	140	6400
44	88 × 1.5	160	7600
48	110 × 1.5	180	6800
60	130 × 2.0	230	7400
64	125 × 2.0	250	8300
75	158 × 2.0	310	8200
80	148 × 2.0	340	9600
99	215 × 2.5	440	8500
120	230 × 2.5	550	9950
150	340 × 2.5	730	8950

The standard nut is through hardened to 56 → 60 HRc: under some load conditions it is necessary to use hardened & ground spacers (S) to avoid bedding of the nut into the housing & stopper resulting in loss of preload and rigidity.

Table 2

SVC/BVC/PVU

	Housing stopper thread	Tightening torque	Squeeze load
d_1	mm	Nm	N
8	25 × 1.0	20	3250
10	27 × 1.0	27	4000
12	30 × 1.0	35	4800
16	35 × 1.0	48	5600
20	40 × 1.0	62	6400
25	47 × 1.0	82	7200
32	60 × 1.0	110	7600
40	75 × 1.5	145	8000
50	87 × 1.5	300	9000
63	108 × 2.0	300	9600
80	146 × 2.0	335	9500
100	185 × 2.5	440	9900
125	230 × 2.5	580	10000

SRC/BRC

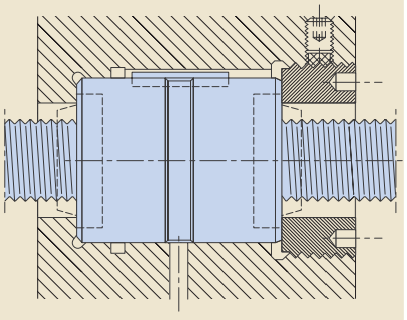

TRU/PRU

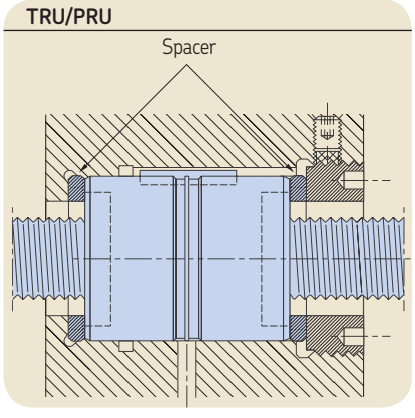

SVC/BVC

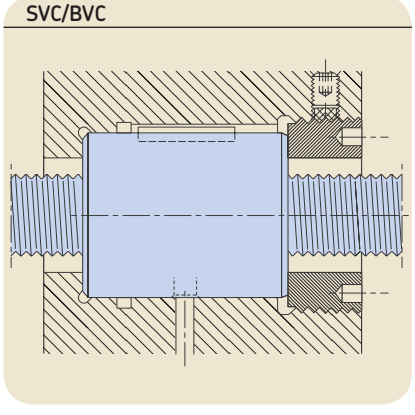

PVU

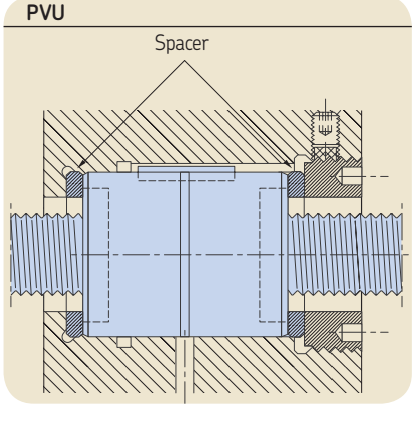

Preload adjustment

Flanged nuts

For flanged nuts (types TRK and PRK for planetary roller screws - type PVK for recirculating roller screws), fixing bolts must be tightened according to table 3.

Table 3

TRK/PRK/PVK

d_0	Number of screws	Screw size	Tightening torque
			Nm
8	6	M4	3
10	6	M4	3
12	6	M4	3
15	6	M5	6
16	6	M4	3
20	6	M5	6
21	6	M5	6
25 (T/PRK)	6	M6	10
25 (PVK)	6	M5	6
30	6	M8	25
32	6	M6	10
36	6	M8	25
39	6	M10	50
40	6	M8	25
44	6	M10	50
48	6	M12	80
50	6	M10	50
56	6	M12	80
60	6	M16	200
63	6	M12	80
64	6	M16	200
80	8	M16	200
100	12	M16	200
125	12	M18	270

Quality assured

Transrol is certified
ISO 9001/2000 as well as
ISO 14001.
Process running for OHSAS 18001.

Product inspection and certification

Special inspection reports or certificates can be provided and tailored to individual needs on request.
The following are available:

1 - Certificate of conformance
2 - Lead precision curve
3 - Dimensional inspection reports
4 - Stiffness curves
5 - Magnetic particle inspection
6 - Raw materiel conformity from supplier
7 - Chemical analysis
8 - Heat treatment
9 - Induction hardening
10 - Manufacturing & checking list



CERTIFICATE OF APPROVAL

This is to certify that the Quality Management System of:

TRANSROL
148 Rue Felix Esclangon
ZI de Bissy
73024 Chambéry, France

has been approved by Lloyd's Register Quality Assurance France SAS to the following Quality Management System Standards:

ISO 9001:2000

The Quality Management System is applicable to:

Design and manufacture of ball and roller screws and electromechanical actuators. Delivery of rail guides.

Approval Certificate No: FQA 0033874

Original Approval: 27th May 1997
Current Certificate: 13th May 2005
Certificate Expiry: 14th May 2008

Issued by LRQA France SAS

Service Range



Planetary roller screws with bearing units

Delivery time

1 week
without end machining
2 weeks
with machined ends

Nuts

▶ With backlash elimination by oversize rollers: BRC.

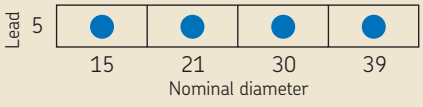

Details page 30

Capabilities

▶ Machined ends:
- premachined shafts for machining by the customer
- to customer drawing (see general rules)
- suitable for FLRBU units.

▶ Screw dimensions: see page 30.

Delivery time

4 weeks
with machined ends
to customer drawing

Nuts

▶ With axial play: SRC-SRF
▶ With backlash elimination: TRU-TRK
▶ Preloaded: PRU-PRK for optimum rigidity.

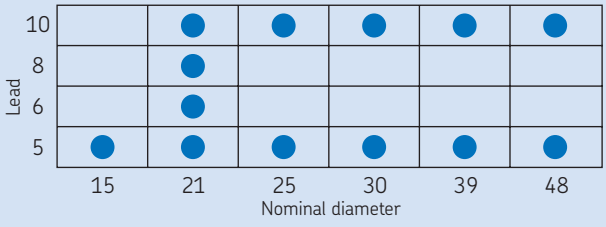

Details page 32

Capabilities

▶ Machined ends to customer drawing (see general rules).
▶ Screw dimensions:
- up to 1500 mm maxi length
- up to 900 mm threaded length.

GENERAL RULES FOR ALL THE SERVICE RANGE

- up to 3 pieces.
- lead precision: G5 to ISO standard.
- standard nuts, standard steel (no special documents such as conformity report).
- lubrication: screw assemblies delivered with machined ends are greased with SKF LGEP2 (temperature range: -20 °C / +120 °C); without end machining, they are only protected with rust inhibitor.

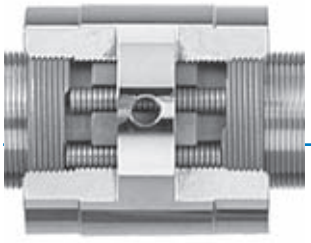

Service Range

Recirculating roller screws with bearing units

Delivery time

1 week
without end machining
2 weeks
with machined ends

Nuts

- With backlash elimination by oversize rollers: BVC.

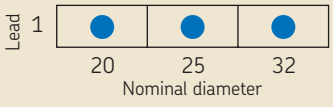

Details page 31

Capabilities

- Machined ends:
  - premachined shafts for machining by the customer
  - to customer drawing (see general rules)
  - suitable for FLRBU units
- Screw dimensions: see page 31

Delivery time

4 weeks
with machined ends
to customer drawing

Nuts

- With axial play: SVC
- Preloaded: PVU-PVK for optimum rigidity.

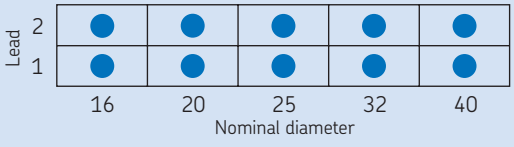

Details page 32

Capabilities

- Machined ends to customer drawing (see general rules)
- Screw dimensions:
  - up to 1500 mm maxi length
  - up to 900 mm threaded length

5

RULES (continuation)

- standard machining: no spline, no hollow shaft, no radius in grinding operations. If any such requirements, order cannot be accepted by the Service Channel. Unless specified, tolerances will be according to class 5, ISO 3408-3 (see page 24). FLRBU thrust bearing units can be delivered for all sizes.
- screws for nuclear, aerospace, military or medical applications are excluded.

Service Range
Planetary roller screws “BRC”
+ thrust bearing assembly (option)

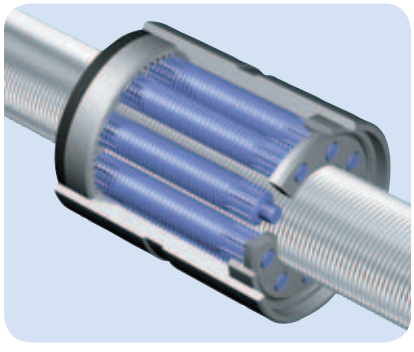

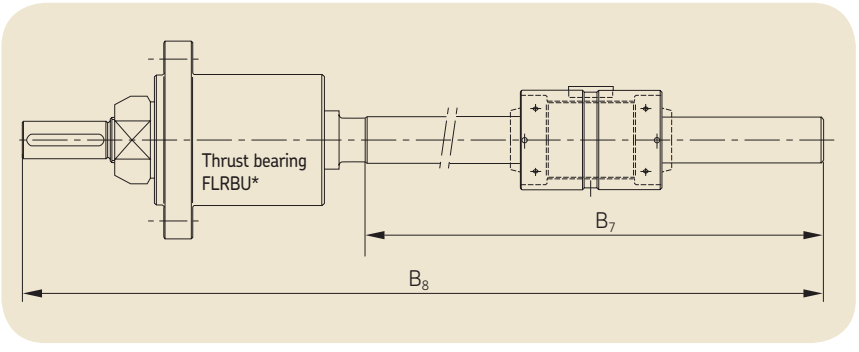

Designation	C_a	C_{oa}	T_{pr}*	R_{nr}	d_1	d_8	d_{10}	B_5	B_6	R	D	A	w	a	b	H	Q	B
	kN	kN	Nm	N/µm														
BRC 15x5-R5	25.9	43.5	0.10	150	15.4	14.3	25	115	400	1.2	35	50	0.5	4	16	36.5	5	3
BRC 21x5-R5	50.5	81.9	0.30	200	21.4	20.3	40	178	570	1.2	45	64	0.5	5	20	47.0	5	4
BRC 30x5-R5	91.9	178.3	0.60	300	30.4	29.3	50	213	800	2.0	64	85	0.5	6	32	66.5	5	7
BRC 39x5-R5	129.2	268.9	1.10	400	39.4	38.3	70	259	1046	2.0	80	100	1.0	8	40	83.0	7	8

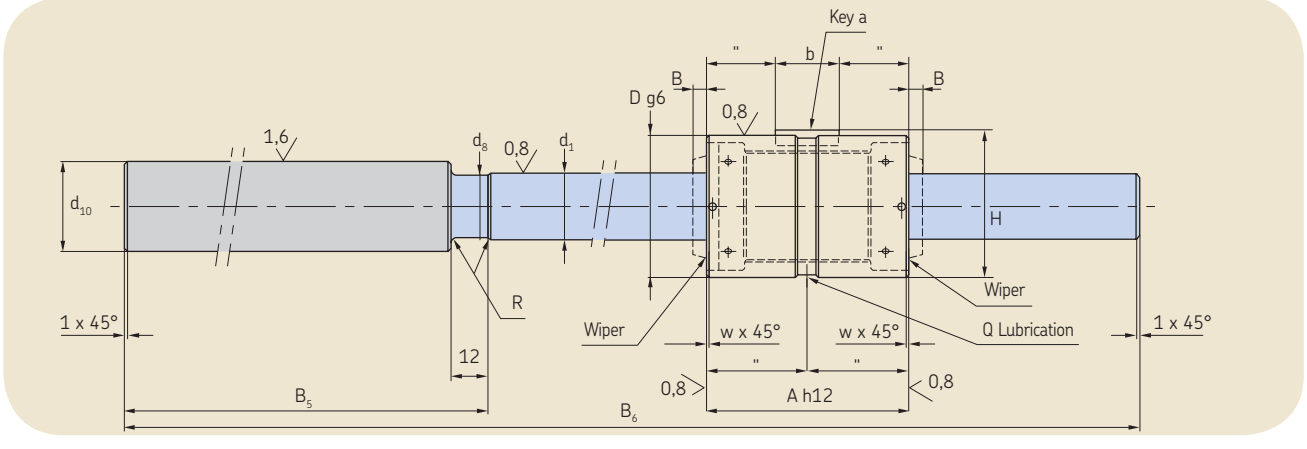

Screw designation	Thrust bearing designation	B_7	B_8
BRC 15x5-R5	FLRBU2	285	398
BRC 21x5-R5	FLRBU4	392	568
BRC 30x5-R5	FLRBU5	587	798
BRC 39x5-R5	FLRBU6	787	1044

End which can be machined to customer requirements.

Maximum threaded length: can be cut & machined to customer requirements.

N.B.: Nut and thrust bearing unit cannot be modified.
In standard version, the flange of the thrust bearing is located on the KMT side.

* Preload torque measured at 50 rpm with SKF LGEP2 as lubricant.

Service Range
Recirculating roller screws “BVC”
+ thrust bearing assembly (option)

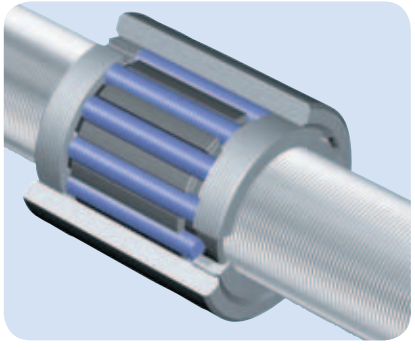

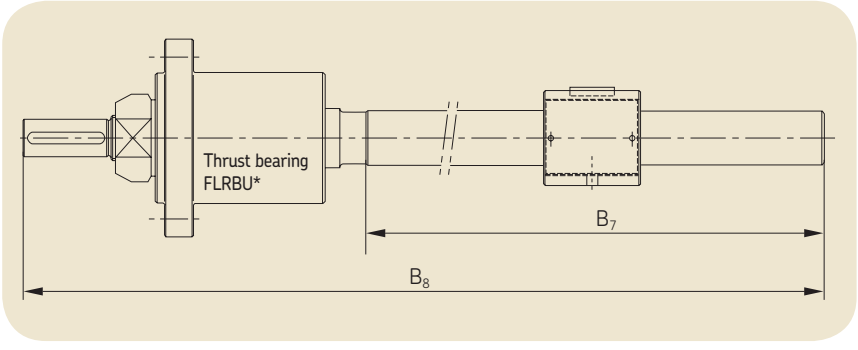

Designation	C_a	C_{oa}	T_{pr}*	R_{nr}	d_1	d_8	d_{10}	B_5	B_6	R	D	A	w	a	b	H	Q
	kN	kN	Nm	N/µm													
BVC 20x1-R1	18.5	36.6	0.20	200	20	19.1	28	116	400	1.2	34	37	0.5	3	16	35.2	5
BVC 25x1-R1	32.9	68.4	0.30	250	25	24.1	33	159	500	1.2	42	44	0.5	4	20	43.5	5
BVC 32x1-R1	64.3	159.2	0.40	300	32	31.1	40	179	500	1.2	54	57	1.0	4	25	55.5	5

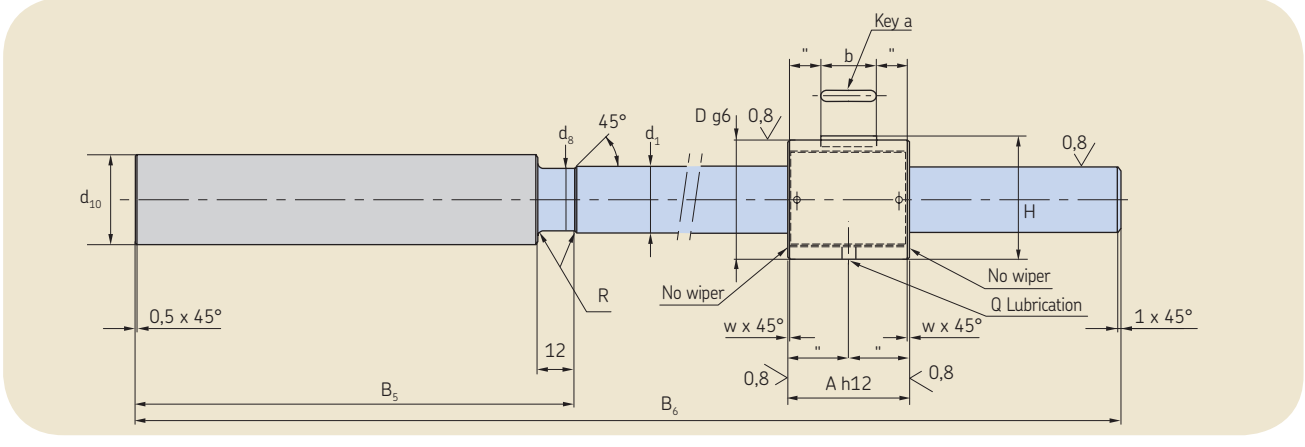

Screw designation	Thrust bearing designation	B_7	B_8
BVC 20x1-R1	FLRBU2	284	397
BVC 25x1-R1	FLRBU3	341	497
BVC 32x1-R1	FLRBU4	321	497

End which can be machined to customer requirements.

Maximum threaded length: can be cut & machined to customer requirements.

N.B.: Nut and thrust bearing unit cannot be modified.
In standard version, the flange of the thrust bearing is located on the KMT side.

* Preload torque measured at 50 rpm with SKF LGEP2 as lubricant.

5

Service Range Standard nuts - Planetary roller screws

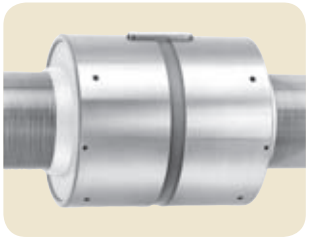
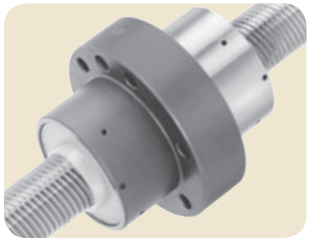
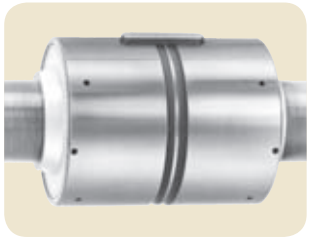
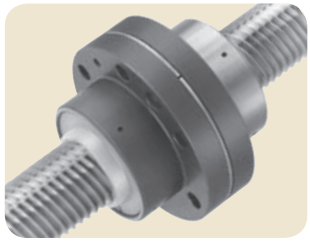

d_0	P_h	N	C_a SRC/SRF	TRU/PRU - TRK/PRK	C_{oa} SRC/SRF	TRU/PRU - TRK/PRK	Dimensions
15	5	5	25,9	14,3	43,5	21,8	
21	5	5	50,5	27,8	81,9	40,9	
21	6	5	52,7	29,0	82,0	41,0	
21	8	5	54,4	30,0	78,0	39,0	
21	10	5	59,2	32,6	83,0	41,5	
25	5	5	63,2	34,8	108,2	54,1	**See pages**
25	10	5	72,6	40,0	105,3	52,6	**38 to 57**
30	5	5	91,9	50,6	178,3	89,1	
30	10	5	106,3	58,5	174,3	87,1	
39	5	5	129,2	71,1	268,9	134,4	
39	10	5	152,6	84,0	270,9	135,4	
48	5	5	198,0	109,1	481,5	240,7	
48	10	5	231,5	127,5	475,1	237,5	

Standard nuts - Recirculating roller screws

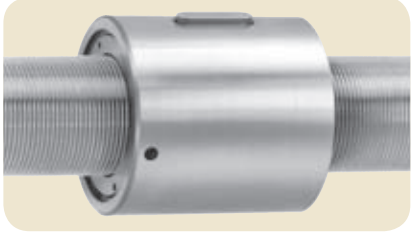

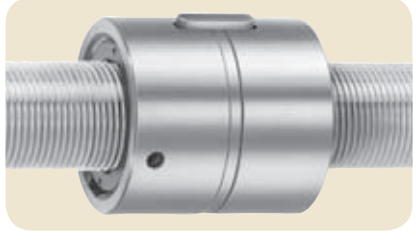

d_0	P_h	N	C_a SVC	PVU-PVK	C_{oa} SVC	PVU-PVK	Dimensions
16	1	1	11,5	6,6	16,8	8,4	
16	2	2	11,5	6,6	16,8	8,4	
20	1	1	18,5	10,6	36,6	18,3	
20	2	2	18,5	10,6	36,6	18,3	
25	1	1	32,9	18,9	68,4	34,2	**See pages**
25	2	2	32,9	18,9	68,4	34,2	**64 to 71**
32	1	1	64,3	36,9	159,2	79,6	
32	2	2	64,3	36,9	159,2	79,6	
40	1	1	79,1	45,4	231,6	115,8	
40	2	1	49,9	28,7	117,2	58,6	

Service Range Flanged thrust bearing units

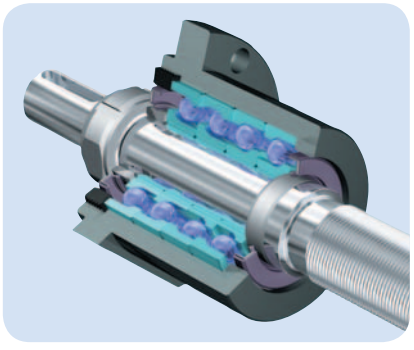

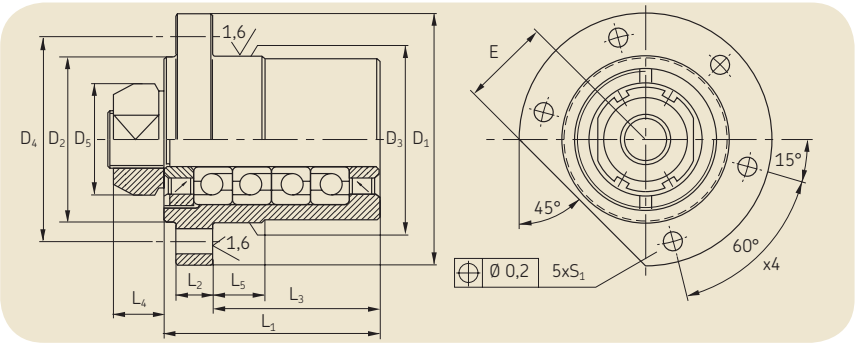

In standard version, the "FLRBU" thrust bearing unit is assembled according to drawing page 30 or 31. If you require a different assembly, please indicate it when ordering. Greased for life with SKF LGEP2.

	Angular contact ball bearing (40°)							Lock nut				
	Basic load rating (axial)		Number of bearings	Bearing designation	Maximum preload torque *	Axial rigidity	Tilt rigidity	High precision KMT nut				
Flanged bearing unit designation	C_a kN	C_{oa} kN			Nm	N/µm	Nm/mrad	Designation	Hook spanner	Tightening torque (Nm) Nm	Grub screws Size	Max. tightening torque (Nm)
FLRBU2	27.9	31.9	2	7303 BEGBP	0.25	190	51	KMT 3	HN 4	15	M6	8
FLRBU3	40.1	63.8	4	7204 BEGBP	0.25	400	140	KMT 4	HN 5	18	M6	8
FLRBU4	74.2	119.2	4	7305 BEGBP	1.10	450	160	KMT 5	HN 5	25	M6	8
FLRBU5	109.4	188.4	4	7307 BEGBP	1.10	600	715	KMT 7	HN 7	42	M6	8
FLRBU6	208.8	392.3	4	7310 BEGBP	1.50	750	1000	KMT 10	HN 10	70	M8	18

Nota: other sizes available: see page 58-60.

5

Dimensions (mm)													
Flanged bearing unit designation	L_1	L_2	L_3	L_4	D1	D2	D3 h7	D4	D5	S_1 H13	Fixing screws	E	L_5
FLRBU2	46	10	32.0	18	90	62	60	76	37	6.6	M6 x 25	32	18
FLRBU3	77	13	60.0	18	90	59	60	74	40	9.0	M8 x 25	32	30
FLRBU4	89	16	68.0	20	120	80	80	100	44	11.0	M10 x 30	44	36
FLRBU5	110	20	82.0	22	140	99	100	120	54	13.0	M12 x 40	54	47
FLRBU6	140	25	98.5	25	171	130	130	152	75	13.0	M12 x 40	67	58,5

* Preload torque measured at 50 rpm with SKF LGEP2 as lubricant.

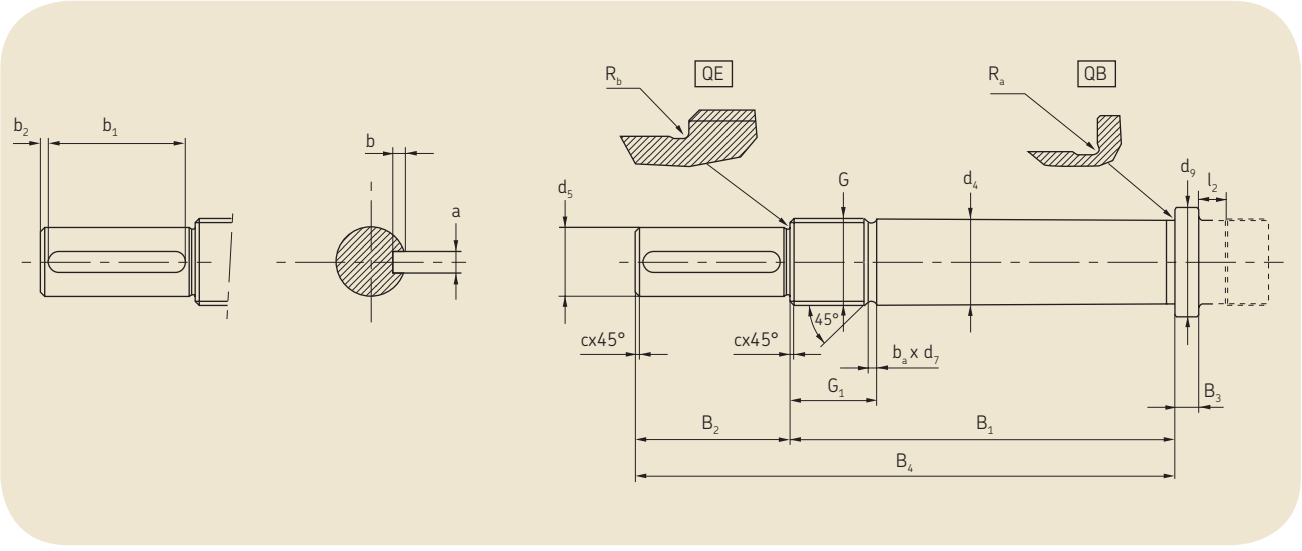

Dimensions (mm)

Thrust bearing units	d_4 h6	d_5 h7	d_9	B_1 js12	B_2	B_4 js12	B_3	G 6g	G_1	c	b_a	d_7 h11	R_a	R_b	a N9	b +0.100 0	b_1 +0.5 0	b_2
FLRBU2	17	15	23	66	30	96	5	M17 × 1	22	0.5	1.5	15.5	0.6	0.6	5	3.0	25	2.0
FLRBU3	20	17	27	97	40	137	7	M20 × 1	22	0.5	1.5	18.5	0.6	0.6	5	3.0	35	2.0
FLRBU4	25	20	34	112	45	157	7	M25 × 1.5	25	0.5	2.3	22.8	0.6	0.6	6	3.5	40	2.5
FLRBU5	35	30	45	134	55	189	10	M35 × 1.5	26	1	2.3	32.8	0.6	0.6	8	4.0	45	2.5
FLRBU6	50	40	62	168	65	233	12	M50 × 1.5	31	1	2.3	47.8	0.8	0.8	12	5.0	55	4.0

Undercut l_2 is defined p20.
d_9 can be equal to the root diameter for some sizes.

Standard Range: contents

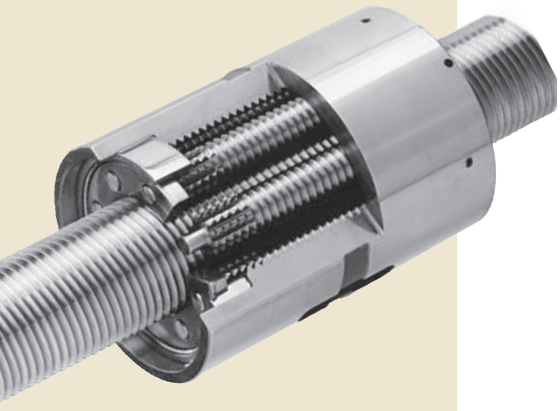

Planetary roller screws: technical data and dimensions

Cylindrical nuts with axial play, SRC 38
Flanged nuts with axial play, SRF 44
Preloaded cylindrical nuts, TRU/PRU 50
Preloaded flanged nuts, TRK/PRK 54

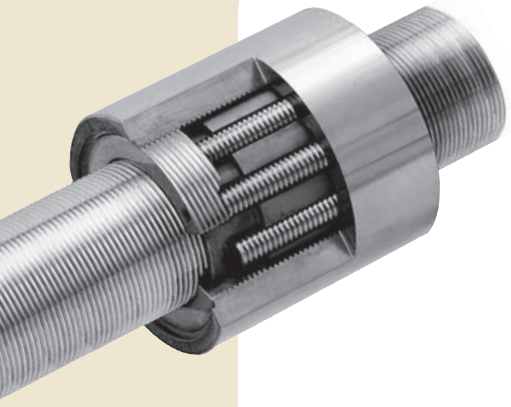

Recirculating roller screws: technical data and dimensions

Cylindrical nuts with axial play, SVC 64
Flanged nuts with axial play, SVF 66
Preloaded cylindrical nuts, PVU 68
Preloaded flanged nuts, PVK 70

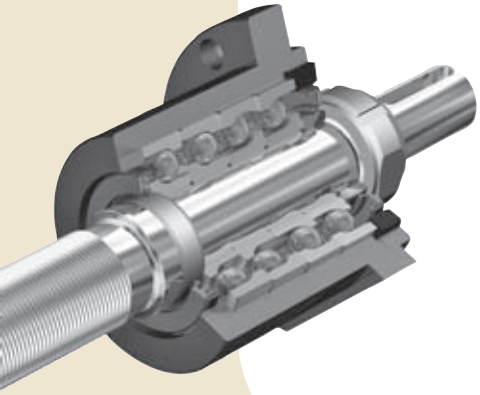

Flanged thrust bearing unit, FLRBU

..... 58 & 72

5

Standard Range

The full range of “SR” planetary roller screws

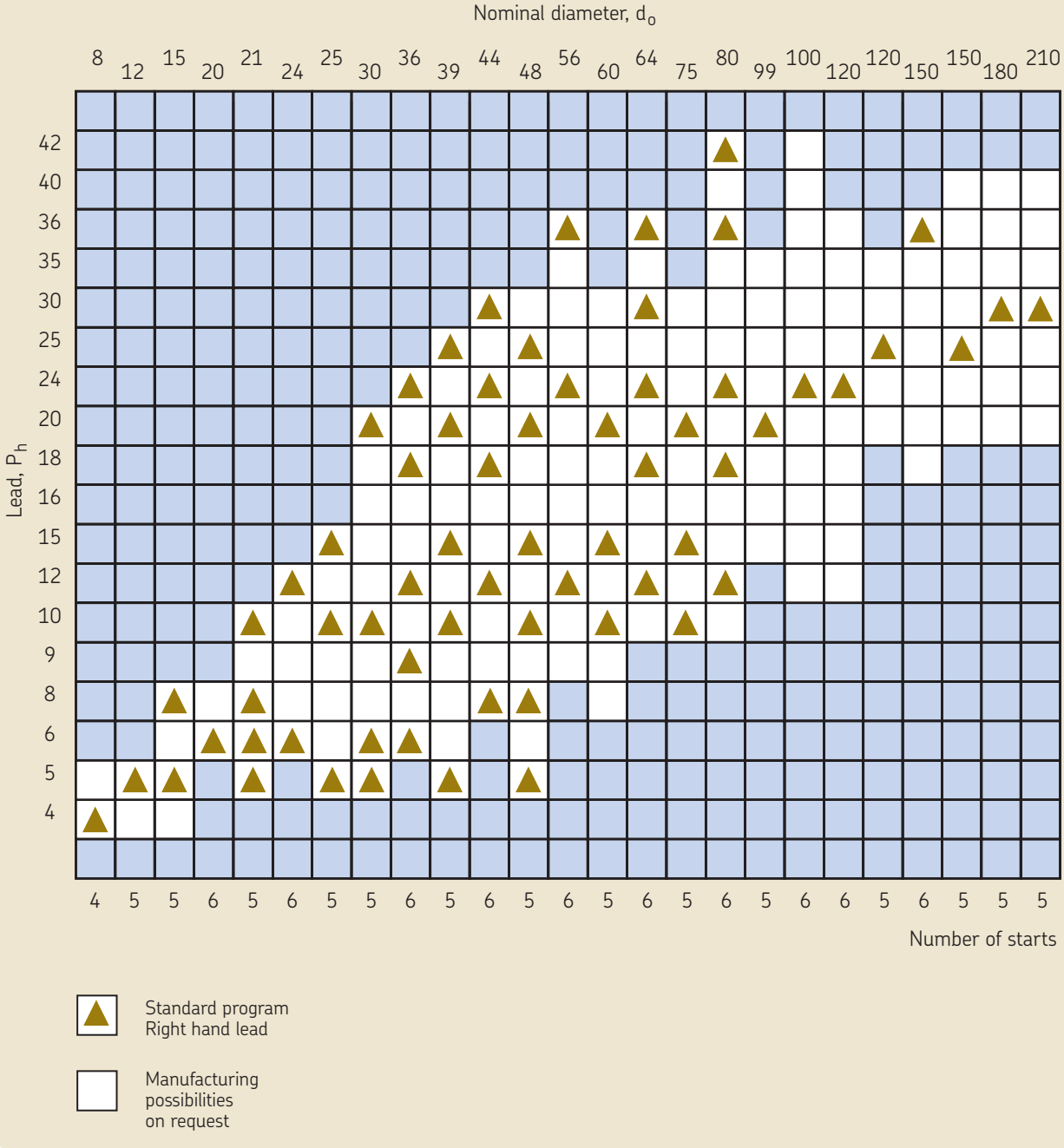

SKF planetary roller screws







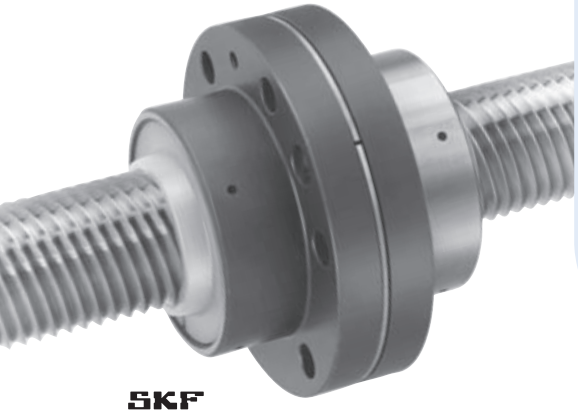

The robust screw for long life in tough conditions has these advantages

- Very high load carrying capacity
- Very long life
- High rotational speed and long lead permit linear speed up to 90 metres/minute
- Planetary timing mechanism permits high acceleration (> 12 000 rad/sec^2)
- Robust design to withstand shock loads
- Choice of 3 classes of lead precision
- Planetary timing mechanism ensures correct functioning even in adverse environments such as ice, dirt or poor lubrication
- Special and left hand leads easily available
- Special steels available
- Special surface treatments and lubrication available
- Nut removal without losing rolling elements
- Cylindrical and flanged nuts, with play or preloaded
- Built in wipers available in all cases.

○ Backlash elimination with oversize rollers: as an option under following conditions:

▶ $\frac{\text{total length}}{d_0} \leq 30$

▶ $\frac{\text{threaded length}}{d_0} \leq 15$

5

Cylindrical nuts with axial play, SRC
Backlash elimination with oversize rollers ○ as an option (BRC)
d_0 8 ▶ 36 mm

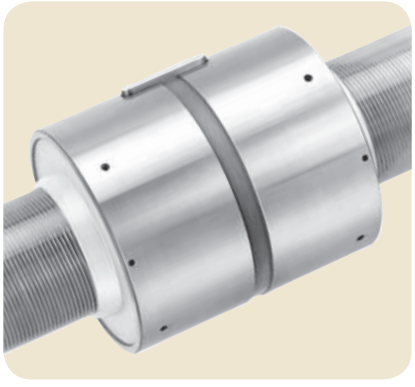

Standard

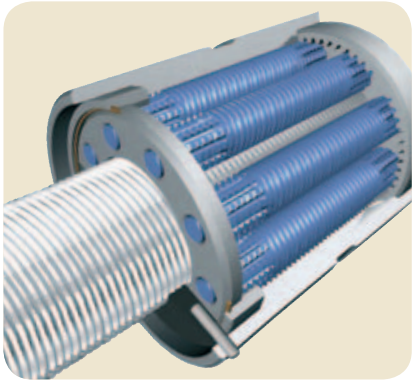

Threaded rollers



Customised

	d_0	P_h	N	l_{tp}	α	N_r	Nmax	C_a	C_{oa}	S_{ap}	m_n	m_s	I_s	I_{nn}	I_{ns}	Z_n	Designation
	mm	mm	—	mm	°			kN	kN	mm	kg	kg/m	kgmm²/m	kgmm²	kgmm²	cm³	
○	**8**	**4**	4	500	9,04	7	8	11,24	19,59	0,02	0,1	0,4	3,2	11,4	0,1	0,91	**SRC 8x4**
○	**12**	**5**	5	750	7,55	9	11	17,73	26,71	0,02	0,2	0,9	16,0	22,9	0,4	1,43	**SRC 12x5**
○	**15**	**5**	5	975	6,06	9	11	25,95	43,59	0,02	0,2	1,4	39,0	45,2	1,2	2,29	**SRC 15x5**
○	**15**	**8**	5	975	9,71	9	10	27,43	40,78	0,02	0,2	1,4	39,0	45,2	1,2	2,29	**SRC 15x8**
○	**20**	**6**	6	1300	5,45	11	14	26,83	44,86	0,02	0,3	2,3	123,3	71,8	2,5	2,47	**SRC 20x6**
○	**21**	**5**	5	1400	4,33	9	11	50,55	81,97	0,02	0,4	2,7	149,9	141,2	6,5	5,03	**SRC 21x5**
○	**21**	**6**	5	1400	5,20	9	11	52,77	82,18	0,02	0,4	2,7	149,9	141,2	6,5	5,03	**SRC 21x6**
○	**21**	**8**	5	1400	6,95	9	11	54,44	78,06	0,02	0,4	2,7	149,9	141,2	6,5	5,03	**SRC 21x8**
○	**21**	**10**	5	1400	8,62	9	10	59,24	83,01	0,04	0,4	2,7	149,9	141,2	6,5	5,03	**SRC 21x10**
○	**24**	**6**	6	1600	4,55	11	14	42,30	65,17	0,02	0,5	3,6	255,7	173,2	6,3	4,24	**SRC 24x6**
○	**24**	**12**	6	1600	9,04	11	13	47,65	62,34	0,04	0,5	3,6	255,7	173,2	6,3	4,24	**SRC 24x12**
○	**25**	**5**	5	1650	3,64	8	11	63,25	108,23	0,02	0,7	3,9	301,0	321,9	14,3	10,2	**SRC 25x5**
○	**25**	**10**	5	1650	7,26	8	11	72,63	105,31	0,04	0,7	3,9	301,0	321,9	14,3	10,2	**SRC 25x10**
○	**25**	**15**	5	1650	10,81	8	10	79,17	106,39	0,07	0,7	3,9	301,0	321,9	14,3	10,2	**SRC 25x15**
○	**30**	**5**	5	2000	3,04	9	11	91,98	178,32	0,02	1,2	5,6	624,2	762,4	36,2	13,7	**SRC 30x5**
○	**30**	**6**	5	2000	3,63	9	11	95,00	175,34	0,02	1,2	5,6	624,2	762,4	36,2	13,7	**SRC 30x6**
○	**30**	**10**	5	2000	6,06	9	11	106,32	174,36	0,04	1,2	5,6	624,2	762,4	36,2	13,7	**SRC 30x10**
○	**30**	**20**	5	2000	11,98	9	10	123,28	177,28	0,07	1,2	5,6	624,2	761,9	35,9	13,7	**SRC 30x20**
○	**36**	**6**	6	2400	3,04	11	14	90,45	179,39	0,02	1,2	8,0	129E1	922,8	45,7	13,4	**SRC 36x6**
○	**36**	**9**	6	2400	4,55	11	14	97,52	174,05	0,02	1,2	8,0	129E1	922,8	45,7	13,4	**SRC 36x9**
○	**36**	**12**	6	2400	6,06	11	14	106,60	181,10	0,04	1,2	8,0	129E1	873,1	45,7	13,4	**SRC 36x12**
○	**36**	**18**	6	2400	9,04	11	13	114,14	176,57	0,07	1,2	8,0	192E1	873,1	45,7	13,4	**SRC 36x18**
○	**36**	**24**	6	2400	11,98	11	12	123,60	184,38	0,07	1,2	8,0	129E1	873,1	45,7	13,4	**SRC 36x24**

Designation: page 87 - Symbols: page 86

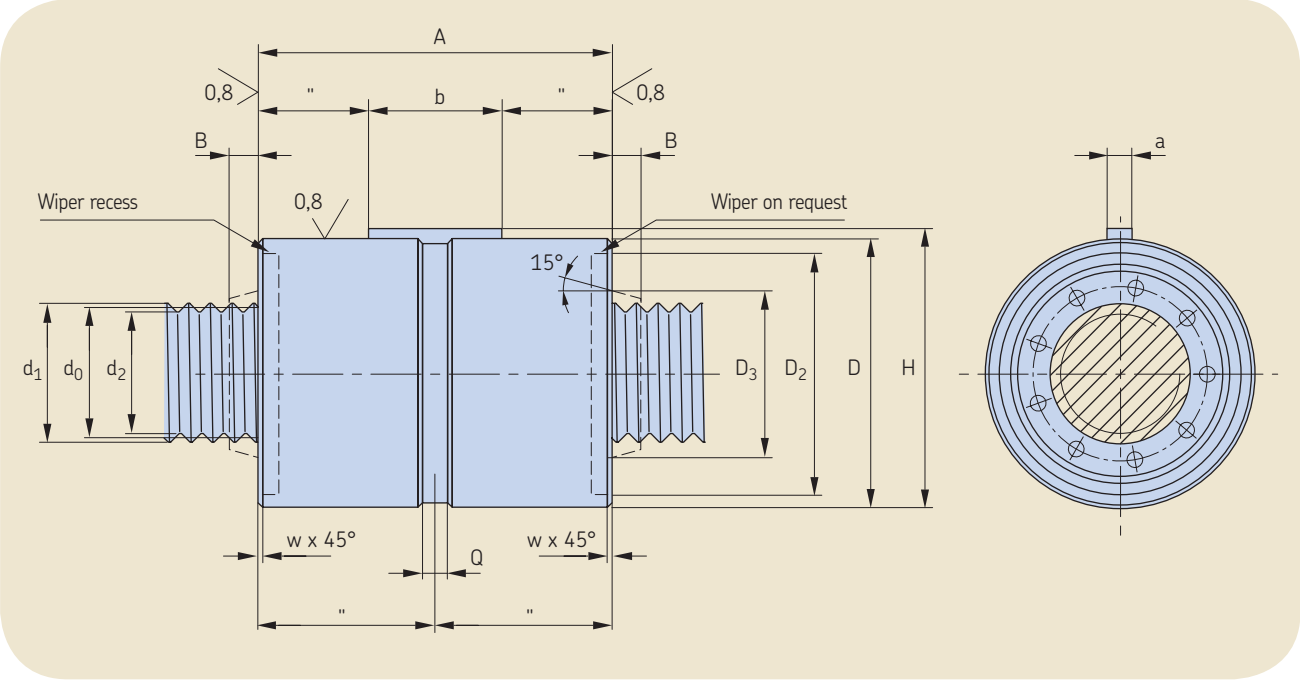

Designation	d_0	d_1	d_2	D g6/H7	A h12	w	a h9	b	H	Q	B	D_2	D_3
	mm	mm	mm	mm	mm	mm	mm	mm	mm	mm	mm	mm	mm
SRC 8x4	8	8,4	7,3	**25**	44	0,5	4	12	26,5	5	3	21,0	13
SRC 12x5	12	12,4	11,3	**30**	44	0,5	4	12	31,5	5	3	25,0	17
SRC 15x5	15	15,4	14,3	**35**	50	0,5	4	16	36,5	5	3	30,0	20
SRC 15x8	15	15,5	14,0	**35**	50	0,5	4	16	36,5	5	3	30,0	20
SRC 20x6	20	20,4	19,3	**40**	50	0,5	4	16	41,5	5	4	35,0	25
SRC 21x5	21	21,4	20,3	**45**	64	0,5	5	20	47,0	5	4	40,5	26
SRC 21x6	21	21,4	20,3	**45**	64	0,5	5	20	47,0	5	4	40,5	26
SRC 21x8	21	21,5	20,0	**45**	64	0,5	5	20	47,0	5	4	40,5	26
SRC 21x10	21	21,8	19,7	**45**	64	0,5	5	20	47,0	5	4	40,5	26
SRC 24x6	24	24,4	23,3	**48**	58	0,5	5	20	50,0	5	6	42,0	31
SRC 24x12	24	24,8	22,7	**48**	58	0,5	5	20	50,0	5	6	42,0	31
SRC 25x5	25	25,4	24,3	**53**	78	0,5	6	25	55,5	5	6	47,0	32
SRC 25x10	25	25,8	23,7	**53**	78	0,5	6	25	55,5	5	6	47,0	32
SRC 25x15	25	26,2	23,1	**53**	78	0,5	6	25	55,5	5	6	47,0	32
SRC 30x5	30	30,4	29,3	**64**	85	0,5	6	32	66,5	5	7	58,0	38
SRC 30x6	30	30,4	29,3	**64**	85	0,5	6	32	66,5	5	7	58,0	38
SRC 30x10	30	30,8	28,7	**64**	85	0,5	6	32	66,5	5	7	58,0	38
SRC 30x20	30	31,5	27,5	**64**	85	0,5	6	32	66,5	5	7	58,0	38
SRC 36x6	36	36,4	35,3	**68**	80	0,5	5	25	70,0	5	8	62,0	45
SRC 36x9	36	36,5	35,1	**68**	80	0,5	5	25	70,0	5	8	62,0	45
SRC 36x12	36	36,8	34,7	**68**	80	0,5	5	25	70,0	5	8	62,0	45
SRC 36x18	36	37,2	34,1	**68**	80	0,5	5	25	70,0	5	8	62,0	45
SRC 36x24	36	37,5	33,5	**68**	80	0,5	5	25	70,0	5	8	62,0	45

Cylindrical nuts with axial play, SRC
Backlash elimination with oversize rollers ○ as an option (BRC)
d_0 39 ▶ 64 mm

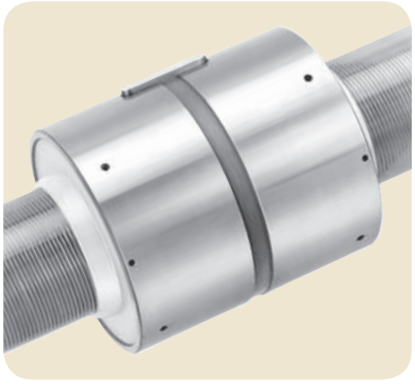

Standard

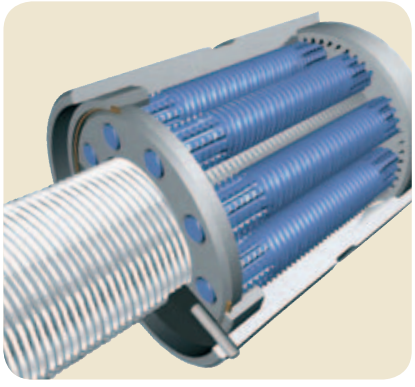

Threaded rollers



Customised

	d_0	P_h	N	l_{tp}	α	N_r	Nmax	C_a	C_{oa}	S_{ap}	m_n	m_s	I_s	I_{nn}	I_{ns}	Z_n	Designation
	mm	mm	—	mm	°			kN	kN	mm	kg	kg/m	kgmm²/m	kgmm²	kgmm²	cm³	
○	**39**	**5**	5	2650	2,34	9	12	129,21	268,92	0,02	2,1	9,4	178E1	203E1	124,4	27,9	**SRC 39x5**
○	**39**	**10**	5	2650	4,67	9	11	152,62	270,93	0,04	2,1	9,4	178E1	203E1	124,4	27,9	**SRC 39x10**
○	**39**	**15**	5	2650	6,98	9	11	167,64	272,89	0,07	2,1	9,4	178E1	203E1	123,6	27,9	**SRC 39x15**
○	**39**	**20**	5	2650	9,27	9	10	172,82	260,89	0,07	2,1	9,4	178E1	203E1	123,6	27,9	**SRC 39x20**
○	**39**	**25**	5	2650	11,53	9	10	174,79	249,00	0,07	2,1	9,4	178E1	203E1	123,6	27,9	**SRC 39x25**
○	**44**	**8**	6	3000	3,30	11	14	130,48	261,47	0,04	1,7	11,9	289E1	173E1	119,2	22,8	**SRC 44x8**
○	**44**	**12**	6	3000	4,96	11	14	143,71	262,87	0,04	1,7	11,9	289E1	173E1	119,2	22,8	**SRC 44x12**
○	**44**	**18**	6	3000	7,42	11	13	157,74	264,94	0,07	1,7	11,9	289E1	173E1	118,3	22,8	**SRC 44x18**
○	**44**	**24**	6	3000	9,85	11	13	167,81	266,95	0,07	1,7	11,9	289E1	173E1	118,3	22,8	**SRC 44x24**
○	**44**	**30**	6	3000	12,24	11	12	165,86	246,44	0,07	1,7	11,9	289E1	173E1	118,3	22,8	**SRC 44x30**
○	**48**	**5**	5	3300	1,90	9	12	198,08	481,53	0,02	4,2	14,2	409E1	652E1	370,8	54,0	**SRC 48x5**
○	**48**	**8**	5	3300	3,03	9	11	218,43	470,61	0,04	4,2	14,2	409E1	652E1	370,8	54,0	**SRC 48x8**
○	**48**	**10**	5	3300	3,79	9	11	231,54	475,11	0,04	4,2	14,2	409E1	652E1	370,8	54,0	**SRC 48x10**
○	**48**	**15**	5	3300	5,68	9	11	257,75	486,36	0,07	4,2	14,2	409E1	652E1	370,8	54,0	**SRC 48x15**
○	**48**	**20**	5	3300	7,55	9	11	265,69	462,27	0,07	4,2	14,2	409E1	652E1	370,8	54,0	**SRC 48x20**
○	**48**	**25**	5	3300	9,41	9	10	285,86	491,04	0,07	4,2	14,2	409E1	652E1	369,6	54,0	**SRC 48x25**
○	**56**	**12**	6	4000	3,90	11	14	212,17	433,12	0,04	3,2	19,3	758E1	500E1	385,3	46,2	**SRC 56x12**
○	**56**	**24**	6	4000	7,77	11	13	242,22	419,15	0,07	3,2	19,3	758E1	500E1	383,1	46,2	**SRC 56x24**
○	**56**	**36**	6	4000	11,56	11	12	258,33	424,24	0,07	3,2	19,3	758E1	500E1	383,1	46,2	**SRC 56x36**
○	**60**	**10**	5	4250	3,04	9	11	338,57	779,69	0,04	7,3	22,2	999E1	165E2	110E1	103,0	**SRC 60x10**
○	**60**	**15**	5	4250	4,55	9	11	373,06	782,69	0,07	7,3	22,2	999E1	165E2	110E1	103,0	**SRC 60x15**
○	**60**	**20**	5	4250	6,06	9	11	394,97	785,66	0,07	7,3	22,2	999E1	164E2	110E1	103,0	**SRC 60x20**
○	**64**	**12**	6	4600	3,42	14	14	296,38	763,30	0,04	5,4	25,3	129E2	106E2	984,3	46,2	**SRC 64x12**
○	**64**	**18**	6	4600	5,12	13	14	316,72	725,56	0,07	5,2	25,3	129E2	105E2	914,0	54,0	**SRC 64x18**
○	**64**	**24**	6	4600	6,81	13	13	328,93	689,62	0,07	5,2	25,3	129E2	105E2	911,2	54,0	**SRC 64x24**
○	**64**	**30**	6	4600	8,49	11	13	318,15	619,84	0,07	4,9	25,3	129E2	103E2	771,0	69,4	**SRC 64x30**
○	**64**	**36**	6	4600	10,15	11	13	309,12	589,38	0,07	4,9	25,3	129E2	103E2	771,0	69,4	**SRC 64x36**

Designation: page 87 - Symbols: page 86

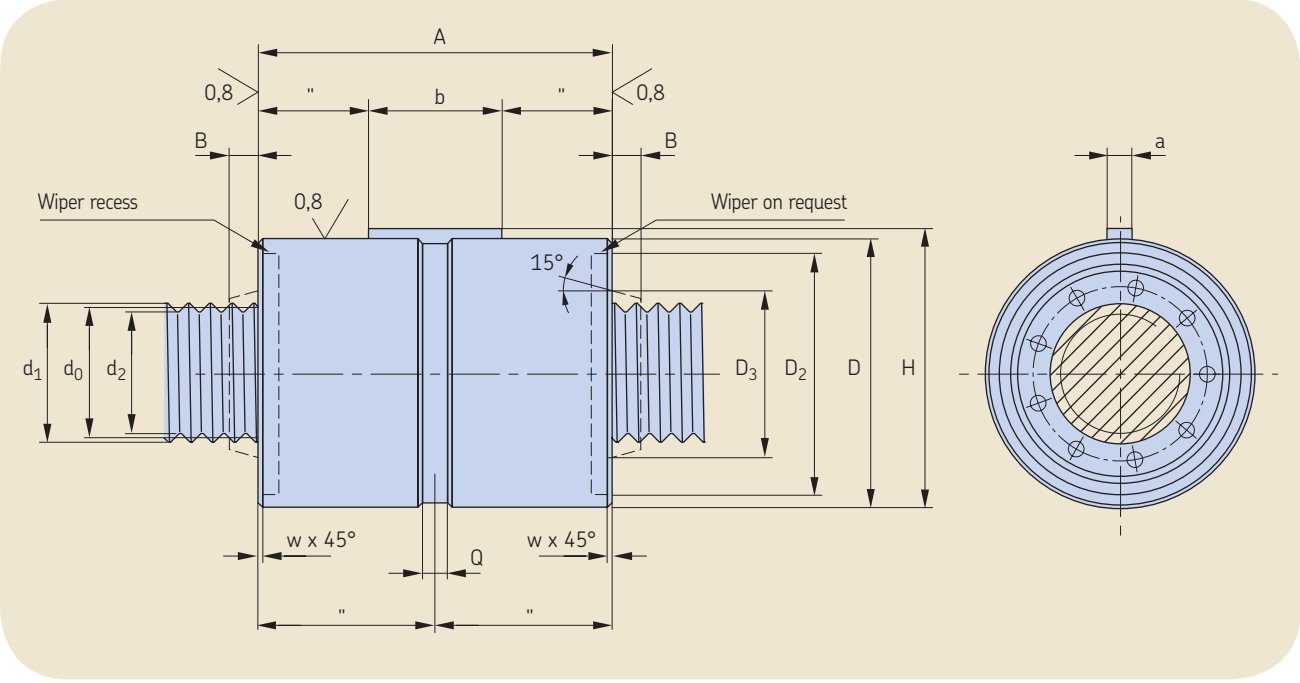

Designation	d_0	d_1	d_2	D g6/H7	A h12	w	a h9	b	H	Q	B	D_2	D_3
	mm	mm	mm	mm	mm	mm	mm	mm	mm	mm	mm	mm	mm
SRC 39x5	39	39,4	38,3	**80**	100	1,0	8	40	83,0	7,0	8	73	50
SRC 39x10	39	39,8	37,7	**80**	100	1,0	8	40	83,0	7,0	8	73	50
SRC 39x15	39	40,2	37,1	**80**	100	1,0	8	40	83,0	7,0	8	73	50
SRC 39x20	39	40,5	36,5	**80**	100	1,0	8	40	83,0	7,0	8	73	50
SRC 39x25	39	40,9	35,9	**80**	100	1,0	8	40	83,0	7,0	8	73	50
SRC 44x8	44	44,4	43,2	**80**	90	0,5	6	32	82,5	7,0	8	74	56
SRC 44x12	44	44,8	42,7	**80**	90	0,5	6	32	82,5	7,0	8	74	56
SRC 44x18	44	45,2	42,1	**80**	90	0,5	6	32	82,5	7,0	8	74	56
SRC 44x24	44	45,5	41,5	**80**	90	0,5	6	32	82,5	7,0	8	74	56
SRC 44x30	44	45,9	40,9	**80**	90	0,5	6	32	82,5	7,0	8	74	56
SRC 48x5	48	48,4	47,3	**100**	127	1,0	8	45	103,0	7,0	9	90	60
SRC 48x8	48	48,6	47,1	**100**	127	1,0	8	45	103,0	7,0	8	90	60
SRC 48x10	48	48,8	46,7	**100**	127	1,0	8	45	103,0	7,0	9	90	60
SRC 48x15	48	49,2	46,1	**100**	127	1,0	8	45	103,0	7,0	9	90	60
SRC 48x20	48	49,5	45,5	**100**	127	1,0	8	45	103,0	7,0	9	90	60
SRC 48x25	48	49,9	44,9	**100**	127	1,0	8	45	103,0	7,0	9	90	60
SRC 56x12	56	56,8	54,7	**100**	112	1,0	8	40	103,0	7,0	9	93	66
SRC 56x24	56	57,5	53,5	**100**	112	1,0	8	40	103,0	7,0	9	93	66
SRC 56x36	56	58,3	52,3	**100**	112	1,0	8	40	103,0	7,0	9	93	66
SRC 60x10	60	60,8	58,7	**122**	152	1,0	10	45	125,0	10,5	9	110	71
SRC 60x15	60	61,2	58,1	**122**	152	1,0	10	45	125,0	10,5	9	110	71
SRC 60x20	60	61,5	57,5	**122**	152	1,0	10	45	125,0	10,5	9	110	71
SRC 64x12	64	64,8	62,7	**115**	129	1,0	8	45	118,0	7,0	11	106	75
SRC 64x18	64	65,2	62,1	**115**	129	1,0	8	45	118,0	7,0	11	106	75
SRC 64x24	64	65,5	61,5	**115**	129	1,0	8	45	118,0	7,0	11	106	75
SRC 64x30	64	65,9	60,9	**115**	129	1,0	8	45	118,0	7,0	11	106	75
SRC 64x36	64	66,3	60,3	**115**	129	1,0	8	45	118,0	7,0	11	106	75

Cylindrical nuts with axial play, SRC
d_0 75 ▶ 210 mm

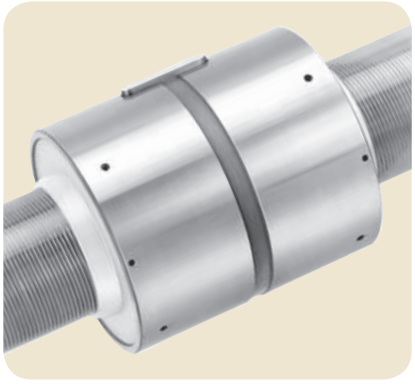
Standard

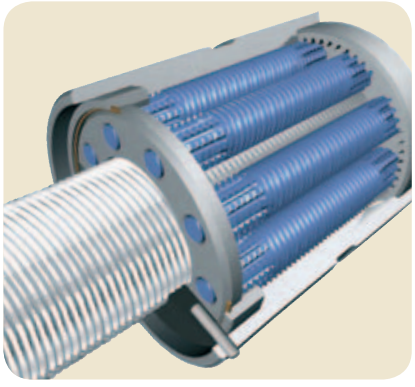
Threaded rollers


Customised

d_0	P_h	N	l_{tp}	α	N_r	Nmax	C_a	C_{oa}	S_{ap}	m_n	m_s	I_s	I_{nn}	I_{ns}	Z_n	Designation
mm	mm	—	mm	°			kN	kN	mm	kg	kg/m	kgmm²/m	kgmm²	kgmm²	cm³	
75	**10**	5	5500	2,43	11	12	504,86	1486,68	0,04	14,6	34,7	244E2	469E2	415E1	143,0	**SRC 75x10**
75	**15**	5	5500	3,64	11	11	561,29	1491,30	0,07	14,6	34,7	244E2	469E2	415E1	143,0	**SRC 75x15**
75	**20**	5	5500	4,85	11	11	572,26	1495,87	0,07	14,6	34,7	244E2	469E2	415E1	143,0	**SRC 75x20**
80	**12**	6	6000	2,73	13	14	410,27	1163,16	0,04	8,9	39,5	316E2	260E2	272E1	103,0	**SRC 80x12**
80	**18**	6	6000	4,10	13	14	455,94	1167,63	0,07	8,9	39,5	316E2	260E2	272E1	103,0	**SRC 80x18**
80	**24**	6	6000	5,45	13	14	485,80	1172,06	0,07	8,9	39,5	316E2	260E2	271E1	103,0	**SRC 80x24**
80	**36**	6	6000	8,15	11	13	442,89	999,09	0,07	8,9	39,5	316E2	252E2	229E1	132,0	**SRC 80x36**
80	**42**	6	6000	9,49	11	13	425,64	932,95	0,07	8,9	39,5	316E2	252E2	229E1	132,0	**SRC 80x42**
99	**20**	5	7500	3,68	11	11	924,86	3090,44	0,07	36,2	60,4	740E2	207E3	175E2	342,0	**SRC 99x20**
100	**24**	6	8000	4,37	13	14	655,81	1825,82	0,07	19,6	61,7	771E2	962E2	836E1	200,0	**SRC 100x24**
120	**24**	6	8000	3,64	13	14	915,02	3027,05	0,07	38,0	88,8	160E3	278E3	224E2	363,0	**SRC 120x24**
120	**25**	5	8000	3,79	11	11	1127,43	4037,97	0,07	55,5	88,8	160E3	453E3	409E2	545,0	**SRC 120x25**
150	**36**	6	7200	4,37	13	14	1156,92	4108,09	0,07	79,8	138,7	390E3	959E3	676E2	719,0	**SRC 150x36**
150	**25**	5	7200	3,04	11	11	1596,53	6816,05	0,07	155,7	138,7	390E3	232E4	146E3	1227,0	**SRC 150x25**
180	**30**	5	5000	3,04	11	11	1962,34	9069,02	0,07	397,8	199,8	809E3	105E5	392E3	2573,0	**SRC 180x30**
210	**30**	5	3700	2,60	11	11	2295,60	11375,26	0,07	542,7	271,9	150E4	188E5	757E3	3771,0	**SRC 210x30**

Designation: page 87 - Symbols: page 86

SKF

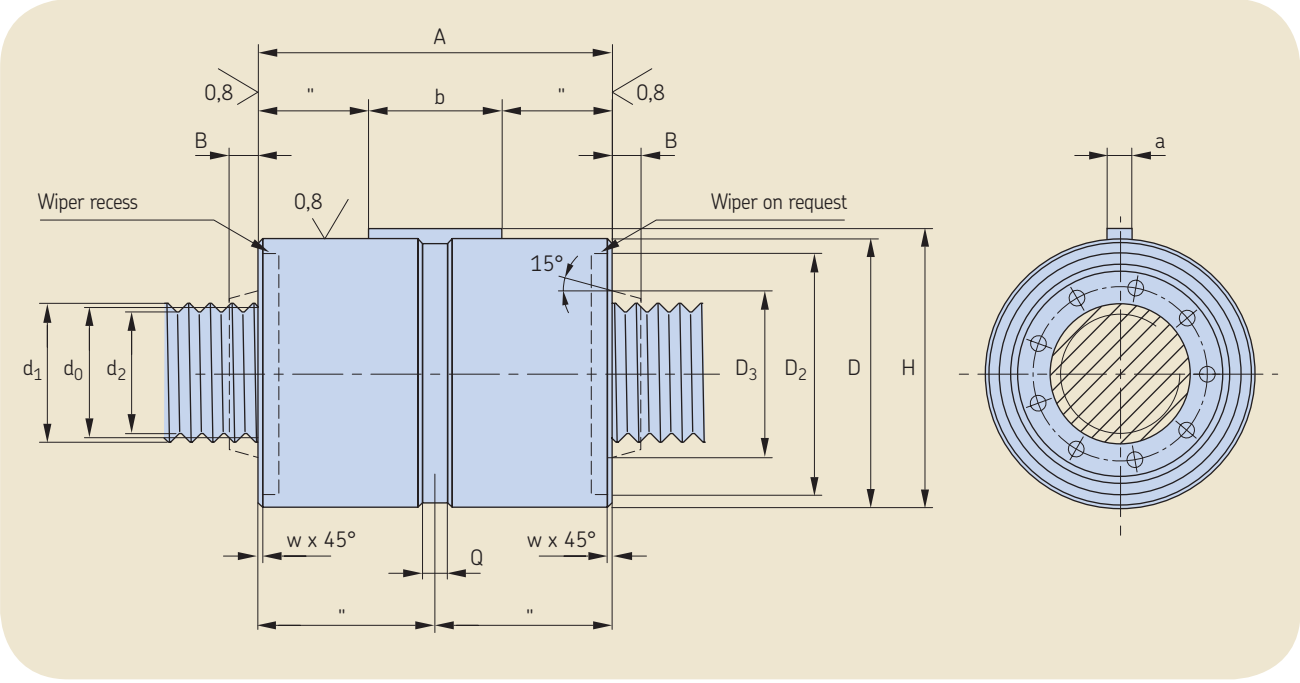

Designation	d_0	d_1	d_2	D g6/H7	A h12	w	a h9	b	H	Q	B	D_2	D_3
	mm	mm	mm	mm	mm	mm	mm	mm	mm	mm	mm	mm	mm
SRC 75x10	75	75,8	73,7	**150**	191	1,0	10	63	153	10,5	10	136	87
SRC 75x15	75	76,2	73,1	**150**	191	1,0	10	63	153	10,5	10	136	87
SRC 75x20	75	76,5	72,5	**150**	191	1,0	10	63	153	10,5	10	136	87
SRC 80x12	80	80,8	78,7	**140**	156	1,0	10	63	143	10,5	12	132	92
SRC 80x18	80	81,2	78,1	**140**	156	1,0	10	63	143	10,5	12	132	92
SRC 80x24	80	81,5	77,5	**140**	156	1,0	10	63	143	10,5	12	132	92
SRC 80x36	80	82,3	76,3	**140**	156	1,0	10	63	143	10,5	12	132	92
SRC 80x42	80	82,7	75,7	**140**	156	1,0	10	63	143	10,5	12	132	92
SRC 99x20	99	100,5	96,5	**200**	260	1,5	16	100	204	15,0	12	180	112
SRC 100x24	100	101,5	97,5	**180**	195	1,5	10	63	183	10,5	12	162	116
SRC 120x24	120	121,5	117,5	**220**	240	2,0	16	100	224	15,0	12	196	136
SRC 120x25	120	121,9	116,9	**240**	280	1,5	16	100	244	15,0	12	220	180
SRC 150x36	150	152,3	146,3	**280**	305	2,0	16	100	284	15,0	13	250	200
SRC 150x25	150	151,9	146,9	**320**	400	3,0	32	160	327	15,0	13	280	230
SRC 180x30	180	182,3	176,3	**420**	515	3,0	32	160	427	20,0	13	340	250
SRC 210x30	210	212,3	206,3	**480**	550	3,0	40	200	489	20,0	20	385	280

Flanged nuts with axial play, SRF
Backlash elimination with oversize rollers ○ as an option (BRF)
d_0 8 ▶ 36 mm

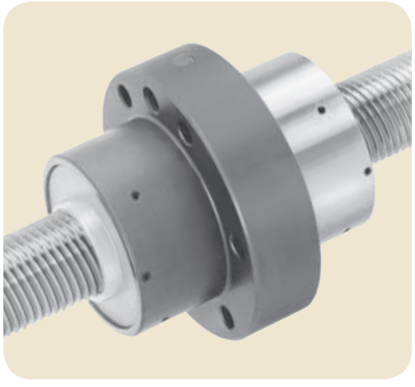

Standard

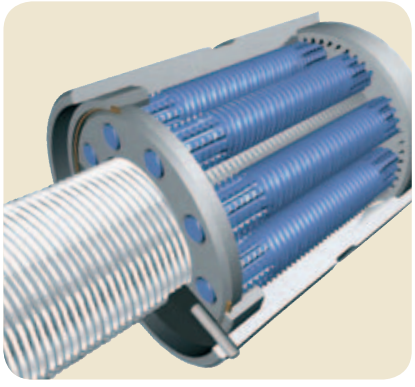

Threaded rollers

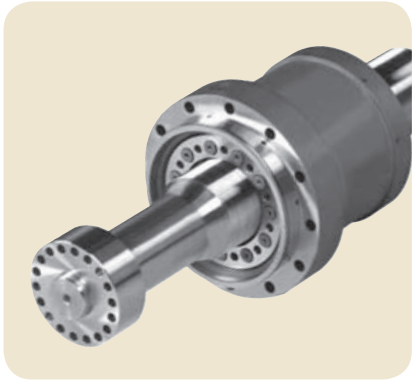

Customised

	d_0	P_h	N	l_{tp}	α	N_r	Nmax	C_a	C_{oa}	S_{ap}	m_n	m_s	I_s	I_{nn}	I_{ns}	Z_n	Designation	
	mm	mm	—	mm	°			kN	kN	mm	kg	kg/m	kgmm²/m	kgmm²	kgmm²	cm³		
○	**8**	**4**	4	500	9,04	7	8	11,24	19,59	0,02	0,3	0,4	3,2	66,4	0,1	0,91	**SRF**	**8x4**
○	**12**	**5**	5	750	7,55	9	11	17,73	26,71	0,02	0,3	0,9	16,0	106,0	0,4	1,43	**SRF**	**12x5**
○	**15**	**5**	5	975	6,06	9	11	25,95	43,59	0,02	0,5	1,4	39,0	201,6	1,2	2,29	**SRF**	**15x5**
○	**15**	**8**	5	975	9,71	9	10	27,43	40,78	0,02	0,5	1,4	39,0	201,6	1,2	2,29	**SRF**	**15x8**
○	**20**	**6**	6	1300	5,45	11	14	26,83	44,86	0,02	0,5	2,3	123,3	289,5	2,5	2,47	**SRF**	**20x6**
○	**21**	**5**	5	1400	4,33	9	11	50,55	81,97	0,02	0,7	2,7	149,9	436,6	6,5	5,03	**SRF**	**21x5**
○	**21**	**6**	5	1400	5,20	9	11	52,77	82,18	0,02	0,7	2,7	149,9	436,6	6,5	5,03	**SRF**	**21x6**
○	**21**	**8**	5	1400	6,95	9	11	54,44	78,06	0,02	0,7	2,7	149,9	436,6	6,5	5,03	**SRF**	**21x8**
○	**21**	**10**	5	1400	8,62	9	10	59,24	83,01	0,04	0,7	2,7	149,9	436,6	6,5	5,03	**SRF**	**21x10**
○	**24**	**6**	6	1600	4,55	11	14	42,30	65,17	0,02	0,8	3,6	255,7	524,2	6,3	4,24	**SRF**	**24x6**
○	**24**	**12**	6	1600	9,04	11	13	47,65	62,34	0,04	0,8	3,6	255,7	524,2	6,3	4,24	**SRF**	**24x12**
○	**25**	**5**	5	1650	3,64	8	11	63,25	108,23	0,02	1,4	3,9	301,0	120E1	14,3	10,2	**SRF**	**25x5**
○	**25**	**10**	5	1650	7,26	8	11	72,63	105,31	0,04	1,4	3,9	301,0	120E1	14,3	10,2	**SRF**	**25x10**
○	**25**	**15**	5	1650	10,81	8	10	79,17	106,39	0,07	1,4	3,9	301,0	120E1	14,3	10,2	**SRF**	**25x15**
○	**30**	**5**	5	2000	3,04	9	11	91,98	178,32	0,02	2,1	5,6	624,2	268E1	36,2	13,7	**SRF**	**30x5**
○	**30**	**6**	5	2000	3,63	9	11	95,00	175,34	0,02	2,1	5,6	624,2	268E1	36,2	13,7	**SRF**	**30x6**
○	**30**	**10**	5	2000	6,06	9	11	106,32	174,36	0,04	2,1	5,6	624,2	268E1	36,2	13,7	**SRF**	**30x10**
○	**30**	**20**	5	2000	11,98	9	10	123,28	177,28	0,07	2,1	5,6	624,2	268E1	35,9	13,7	**SRF**	**30x20**
○	**36**	**6**	6	2400	3,04	11	14	90,45	179,39	0,02	2,2	8,0	129E1	317E1	45,7	13,4	**SRF**	**36x6**
○	**36**	**9**	6	2400	4,55	11	14	97,52	174,05	0,02	2,2	8,0	129E1	317E1	45,7	13,4	**SRF**	**36x9**
○	**36**	**12**	6	2400	6,06	11	14	106,60	181,10	0,04	2,1	8,0	129E1	312E1	45,7	13,4	**SRF**	**36x12**
○	**36**	**18**	6	2400	9,04	11	13	114,14	176,57	0,07	2,1	8,0	192E1	312E1	45,7	13,4	**SRF**	**36x18**
○	**36**	**24**	6	2400	11,98	11	12	123,60	184,38	0,07	2,1	8,0	129E1	312E1	45,7	13,4	**SRF**	**36x24**

Designation: page 87 - Symbols: page 86

SKF

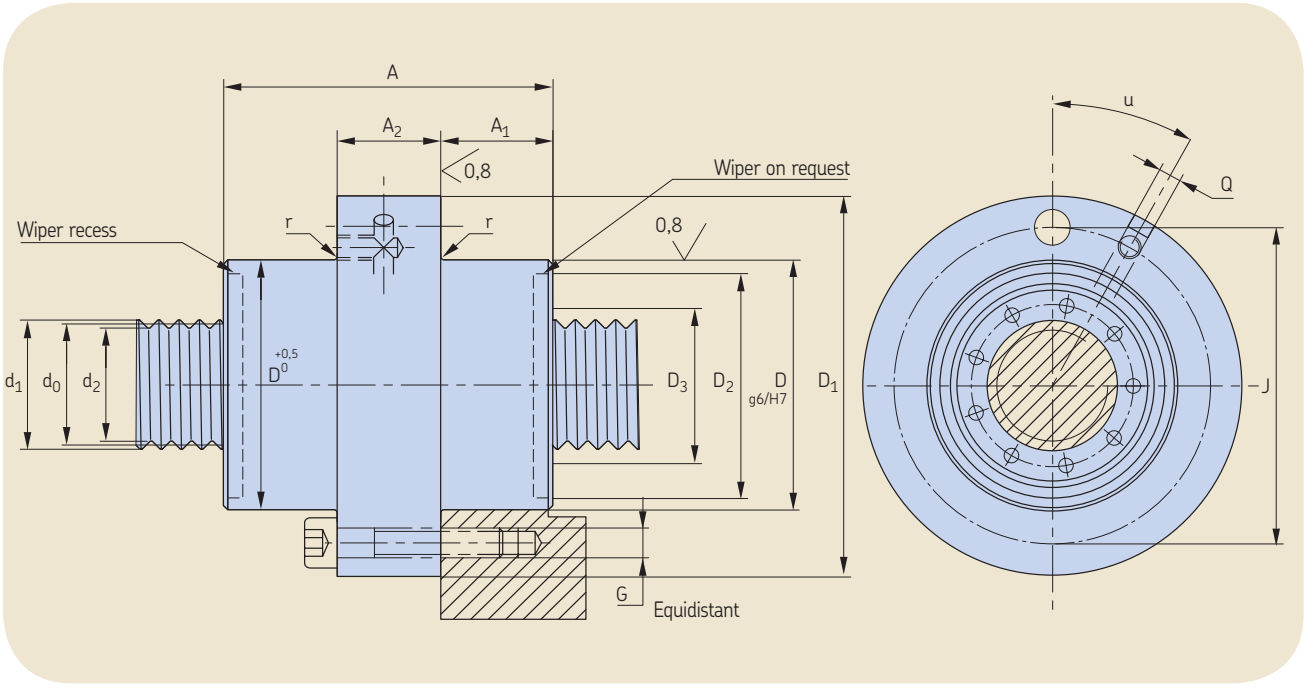

Designation	d_0	d_1	d_2	D	A h12	A_1	A_2	D_1	J js12	G	r +0,4	Q	u	B	D_2	D_3
	mm	mm	mm	mm	mm	mm	mm	mm	mm	mm	mm	mm	°	mm	mm	mm
SRF 8x4	8	8,4	7,3	**25**	44	14,0	16	46	36	6xM4	0,4	M6	30	3	21,0	13
SRF 12x5	12	12,4	11,3	**30**	44	14,0	16	51	41	6xM4	0,4	M6	30	3	25,0	17
SRF 15x5	15	15,4	14,3	**35**	50	16,0	18	58	46	6xM5	0,4	M6	30	3	30,0	20
SRF 15x8	15	15,5	14,0	**35**	50	16,0	18	58	46	6xM5	0,4	M6	30	3	30,0	20
SRF 20x6	20	20,4	19,3	**40**	50	16,0	18	63	51	6xM5	0,8	M6	30	4	35,0	25
SRF 21x5	21	21,4	20,3	**45**	64	23,0	18	68	56	6xM5	0,8	M6	30	4	40,5	26
SRF 21x6	21	21,4	20,3	**45**	64	23,0	18	68	56	6xM5	0,8	M6	30	4	40,5	26
SRF 21x8	21	21,5	20,0	**45**	64	23,0	18	68	56	6xM5	0,8	M6	30	4	40,5	26
SRF 21x10	21	21,8	19,7	**45**	64	23,0	18	68	56	6xM5	0,8	M6	30	4	40,5	26
SRF 24x6	24	24,4	23,3	**48**	58	20,0	18	71	59	6xM5	0,8	M6	30	6	42,0	31
SRF 24x12	24	24,8	22,7	**48**	58	20,0	18	71	59	6xM5	0,8	M6	30	6	42,0	31
SRF 25x5	25	25,4	24,3	**56**	78	29,0	20	84	70	6xM6	0,8	M6	30	6	47,0	32
SRF 25x10	25	25,8	23,7	**56**	78	29,0	20	84	70	6xM6	0,8	M6	30	6	47,0	32
SRF 25x15	25	26,2	23,1	**56**	78	29,0	20	84	70	6xM6	0,8	M6	30	6	47,0	32
SRF 30x5	30	30,4	29,3	**64**	85	29,0	27	97	81	6xM8	0,8	M6	30	7	58,0	38
SRF 30x6	30	30,4	29,3	**64**	85	29,0	27	97	81	6xM8	0,8	M6	30	7	58,0	38
SRF 30x10	30	30,8	28,7	**64**	85	29,0	27	97	81	6xM8	0,8	M6	30	7	58,0	38
SRF 30x20	30	31,5	27,5	**64**	85	29,0	27	97	81	6xM8	0,8	M6	30	7	58,0	38
SRF 36x6	36	36,4	35,3	**68**	80	26,5	27	102	85	6xM8	0,8	M6	30	8	62,0	45
SRF 36x9	36	36,5	35,1	**68**	80	26,5	27	102	85	6xM8	0,8	M6	30	8	62,0	45
SRF 36x12	36	36,8	34,7	**68**	80	26,5	27	102	85	6xM8	0,8	M6	30	8	62,0	45
SRF 36x18	36	37,2	34,1	**68**	80	26,5	27	102	85	6xM8	0,8	M6	30	8	62,0	45
SRF 36x24	36	37,5	33,5	**68**	80	26,5	27	102	85	6xM8	0,8	M6	30	8	62,0	45

Flanged nuts with axial play, SRF
Backlash elimination with oversize rollers ○ as an option (BRF)
d_0 39 ▶ 64 mm

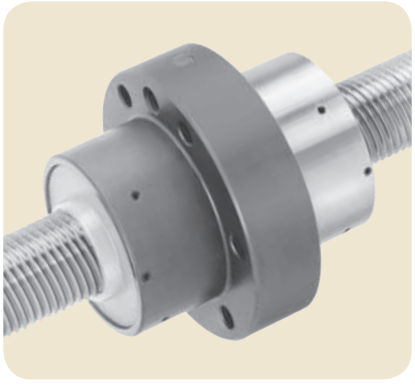

Standard

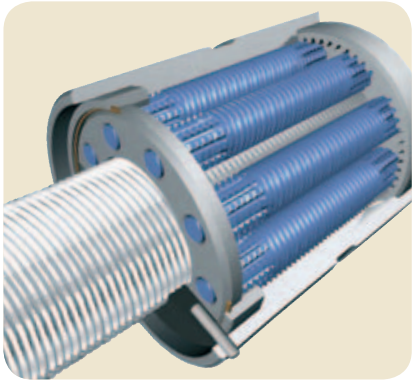

Threaded rollers

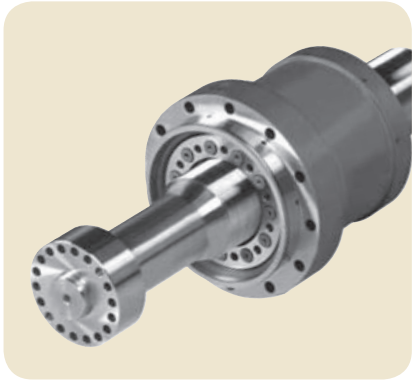

Customised

	d_0	P_h	N	l_{tp}	α	N_r	Nmax	C_a	C_{oa}	S_{ap}	m_n	m_s	I_s	I_{nn}	I_{ns}	Z_n	Designation	
	mm	mm	—	mm	°			kN	kN	mm	kg	kg/m	kgmm²/m	kgmm²	kgmm²	cm³		
○	**39**	**5**	5	2650	2,34	9	12	129,21	268,92	0,02	4,0	9,4	178E1	836E1	124,4	27,9	**SRF**	**39x5**
○	**39**	**10**	5	2650	4,67	9	11	152,62	270,93	0,04	4,0	9,4	178E1	836E1	124,4	27,9	**SRF**	**39x10**
○	**39**	**15**	5	2650	6,98	9	11	167,64	272,89	0,07	4,0	9,4	178E1	836E1	123,6	27,9	**SRF**	**39x15**
○	**39**	**20**	5	2650	9,27	9	10	172,82	260,89	0,07	4,0	9,4	178E1	836E1	123,6	27,9	**SRF**	**39x20**
○	**39**	**25**	5	2650	11,53	9	10	174,79	249,00	0,07	4,0	9,4	178E1	836E1	123,6	27,9	**SRF**	**39x25**
○	**44**	**8**	6	3000	3,30	11	14	130,48	261,47	0,04	3,6	11,9	289E1	803E1	119,2	22,8	**SRF**	**44x8**
○	**44**	**12**	6	3000	4,96	11	14	143,71	262,87	0,04	3,6	11,9	289E1	803E1	119,2	22,8	**SRF**	**44x12**
○	**44**	**18**	6	3000	7,42	11	13	157,74	264,94	0,07	3,6	11,9	289E1	803E1	118,3	22,8	**SRF**	**44x18**
○	**44**	**24**	6	3000	9,85	11	13	167,81	266,95	0,07	3,6	11,9	289E1	803E1	118,3	22,8	**SRF**	**44x24**
○	**44**	**30**	6	3000	12,24	11	12	165,86	246,44	0,07	3,6	11,9	289E1	803E1	118,3	22,8	**SRF**	**44x30**
○	**48**	**5**	5	3300	1,90	9	12	198,08	481,53	0,02	7,8	14,2	409E1	185E2	370,8	54,0	**SRF**	**48x5**
○	**48**	**8**	5	3300	3,03	9	11	218,43	470,61	0,04	7,8	14,2	409E1	185E2	370,8	54,0	**SRF**	**48x8**
○	**48**	**10**	5	3300	3,79	9	11	231,54	475,11	0,04	7,8	14,2	409E1	185E2	370,8	54,0	**SRF**	**48x10**
○	**48**	**15**	5	3300	5,68	9	11	257,75	486,36	0,07	7,8	14,2	409E1	185E2	370,8	54,0	**SRF**	**48x15**
○	**48**	**20**	5	3300	7,55	9	11	265,69	462,27	0,07	7,8	14,2	409E1	185E2	370,8	54,0	**SRF**	**48x20**
○	**48**	**25**	5	3300	9,41	9	10	285,86	491,04	0,07	7,8	14,2	409E1	185E2	369,6	54,0	**SRF**	**48x25**
○	**56**	**12**	6	4000	3,90	11	14	212,17	433,12	0,04	6,5	19,3	758E1	213E2	385,3	46,2	**SRF**	**56x12**
○	**56**	**24**	6	4000	7,77	11	13	242,22	419,15	0,07	6,5	19,3	758E1	213E2	383,1	46,2	**SRF**	**56x24**
○	**56**	**36**	6	4000	11,56	11	12	258,33	424,24	0,07	6,5	19,3	758E1	213E2	383,1	46,2	**SRF**	**56x36**
○	**60**	**10**	5	4250	3,04	9	11	338,57	779,69	0,04	12,1	22,2	999E1	528E2	110E1	103,0	**SRF**	**60x10**
○	**60**	**15**	5	4250	4,55	9	11	373,06	782,69	0,07	12,1	22,2	999E1	528E2	110E1	103,0	**SRF**	**60x15**
○	**60**	**20**	5	4250	6,06	9	11	394,97	785,66	0,07	12,1	22,2	999E1	528E2	110E1	103,0	**SRF**	**60x20**
○	**64**	**12**	6	4600	3,42	14	14	296,38	763,30	0,04	11,3	25,3	129E2	502E2	984,3	46,2	**SRF**	**64x12**
○	**64**	**18**	6	4600	5,12	13	14	316,72	725,56	0,07	11,2	25,3	129E2	501E2	914,0	54,0	**SRF**	**64x18**
○	**64**	**24**	6	4600	6,81	13	13	328,93	689,62	0,07	11,2	25,3	129E2	501E2	911,2	54,0	**SRF**	**64x24**
○	**64**	**30**	6	4600	8,49	11	13	318,15	619,84	0,07	10,9	25,3	129E2	499E2	771,0	69,4	**SRF**	**64x30**
○	**64**	**36**	6	4600	10,15	11	13	309,12	589,38	0,07	10,9	25,3	129E2	499E2	771,0	69,4	**SRF**	**64x36**

Designation: page 87 - Symbols: page 86

SKF

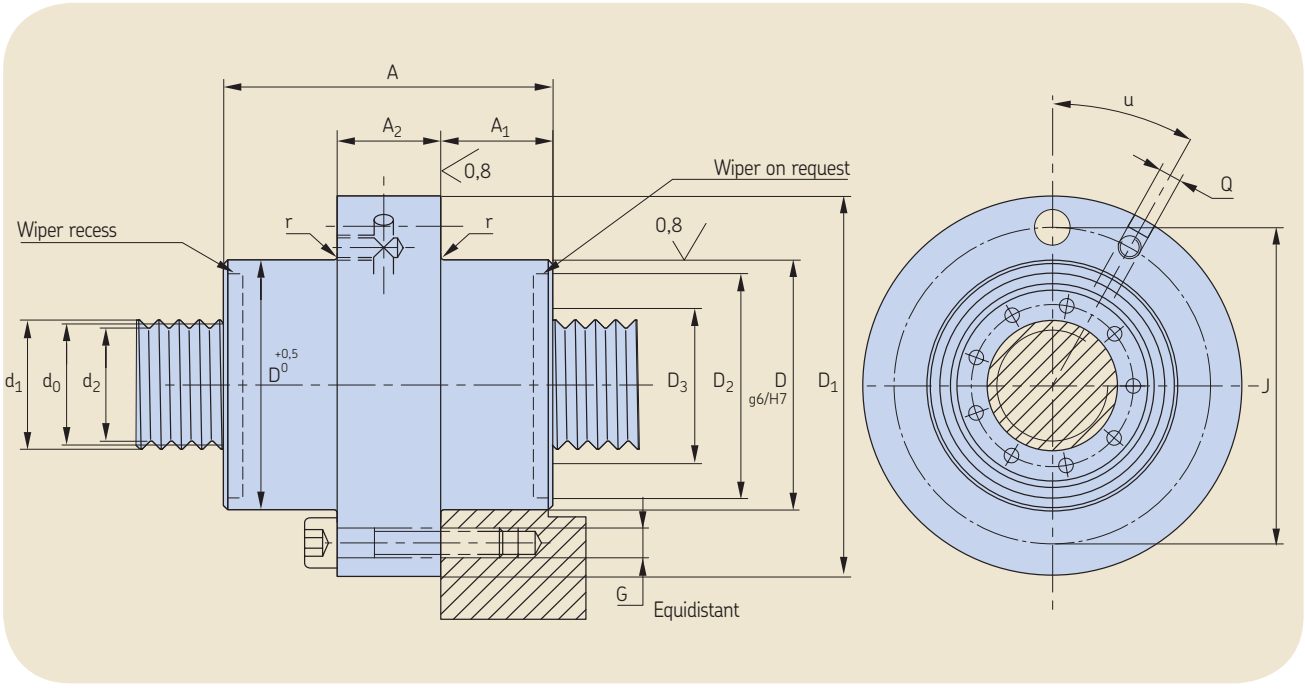

Designation	d_0	d_1	d_2	D	A h12	A_1	A_2	D_1	J js12	G	r +0,4	Q	u	B	D_2	D_3
	mm	mm	mm	mm	mm	mm	mm	mm	mm	mm	mm	mm	°	mm	mm	mm
SRF 39x5	39	39,4	38,3	**82**	100	33,5	33	124	102	6xM10	1,2	M6	30	8	73,0	50
SRF 39x10	39	39,8	37,7	**82**	100	33,5	33	124	102	6xM10	1,2	M6	30	8	73,0	50
SRF 39x15	39	40,2	37,1	**82**	100	33,5	33	124	102	6xM10	1,2	M6	30	8	73,0	50
SRF 39x20	39	40,5	36,5	**82**	100	33,5	33	124	102	6xM10	1,2	M6	30	8	73,0	50
SRF 39x25	39	40,9	35,9	**82**	100	33,5	33	124	102	6xM10	1,2	M6	30	8	73,0	50
SRF 44x8	44	44,4	43,2	**82**	90	28,5	33	124	102	6xM10	1,2	M6	30	8	74	56
SRF 44x12	44	44,8	42,7	**82**	90	28,5	33	124	102	6xM10	1,2	M6	30	8	74	56
SRF 44x18	44	45,2	42,1	**82**	90	28,5	33	124	102	6xM10	1,2	M6	30	8	74	56
SRF 44x24	44	45,5	41,5	**82**	90	28,5	33	124	102	6xM10	1,2	M6	30	8	74	56
SRF 44x30	44	45,9	40,9	**82**	90	28,5	33	124	102	6xM10	1,2	M6	30	8	74	56
SRF 48x5	48	48,4	47,3	**105**	127	45,0	37	150	127	6xM12	1,2	M8x1	30	9	90	60
SRF 48x8	48	48,6	47,1	**105**	127	45,0	37	150	127	6xM12	1,2	M8x1	30	9	90	60
SRF 48x10	48	48,8	46,7	**105**	127	45,0	37	150	127	6xM12	1,2	M8x1	30	9	90	60
SRF 48x15	48	49,2	46,1	**105**	127	45,0	37	150	127	6xM12	1,2	M8x1	30	9	90	60
SRF 48x20	48	49,5	45,5	**105**	127	45,0	37	150	127	6xM12	1,2	M8x1	30	9	90	60
SRF 48x25	48	49,9	44,9	**105**	127	45,0	37	150	127	6xM12	1,2	M8x1	30	9	90	60
SRF 56x12	56	56,8	54,7	**105**	112	37,5	37	150	127	6xM12	1,2	M8x1	30	9	93	66
SRF 56x24	56	57,5	53,5	**105**	112	37,5	37	150	127	6xM12	1,2	M8x1	30	9	93	66
SRF 56x36	56	58,3	52,3	**105**	112	37,5	37	150	127	6xM12	1,2	M8x1	30	9	93	66
SRF 60x10	60	60,8	58,7	**122**	152	53,5	45	180	150	6xM16	1,6	M8x1	30	9	110	71
SRF 60x15	60	61,2	58,1	**122**	152	53,5	45	180	150	6xM16	1,6	M8x1	30	9	110	71
SRF 60x20	60	61,5	57,5	**122**	152	53,5	45	180	150	6xM16	1,6	M8x1	30	9	110	71
SRF 64x12	64	64,8	62,7	**120**	129	42,0	45	180	150	6xM16	1,6	M8x1	30	11	106	75
SRF 64x18	64	65,2	62,1	**120**	129	42,0	45	180	150	6xM16	1,6	M8x1	30	11	106	75
SRF 64x24	64	65,5	61,5	**120**	129	42,0	45	180	150	6xM16	1,6	M8x1	30	11	106	75
SRF 64x30	64	65,9	60,9	**120**	129	42,0	45	180	150	6xM16	1,6	M8x1	30	11	106	75
SRF 64x36	64	66,3	60,3	**120**	129	42,0	45	180	150	6xM16	1,6	M8x1	30	11	106	75

Flanged nuts with axial play, SRF
d_0 75 ▶ 210 mm

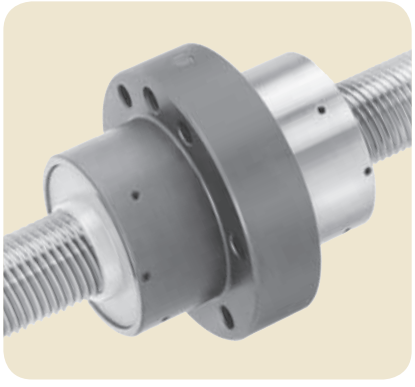
Standard

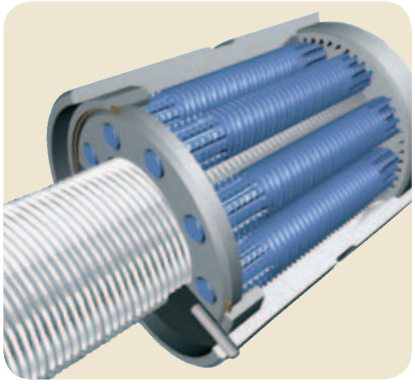
Threaded rollers

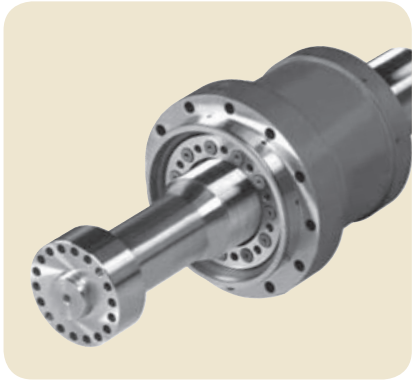
Customised

d_0	P_h	N	l_{tp}	α	N_r	Nmax	C_a	C_{oa}	S_{ap}	m_n	m_s	I_s	I_{nn}	I_{ns}	Z_n	Designation
mm	mm	—	mm	°			kN	kN	mm	kg	kg/m	kgmm²/m	kgmm²	kgmm²	cm³	
75	**10**	5	5500	2,43	11	12	504,86	1486,68	0,04	20,6	34,7	244E2	114E3	415E1	143,0	**SRF 75x10**
75	**15**	5	5500	3,64	11	11	561,29	1491,30	0,07	20,6	34,7	244E2	114E3	415E1	143,0	**SRF 75x15**
75	**20**	5	5500	4,85	11	11	572,26	1495,87	0,07	20,6	34,7	244E2	114E3	415E1	143,0	**SRF 75x20**
80	**12**	6	6000	2,73	13	14	410,27	1163,16	0,04	17,7	39,5	316E2	108E3	272E1	103,0	**SRF 80x12**
80	**18**	6	6000	4,10	13	14	455,94	1167,63	0,07	17,7	39,5	316E2	108E3	272E1	103,0	**SRF 80x18**
80	**24**	6	6000	5,45	13	14	485,80	1172,06	0,07	17,7	39,5	316E2	108E3	271E1	103,0	**SRF 80x24**
80	**36**	6	6000	8,15	11	13	442,89	999,09	0,07	17,7	39,5	316E2	108E3	229E1	132,0	**SRF 80x36**
80	**42**	6	6000	9,49	11	13	425,64	932,95	0,07	17,7	39,5	316E2	108E3	229E1	132,0	**SRF 80x42**
99	**20**	5	7500	3,68	11	11	924,86	3090,44	0,07	48,3	60,4	740E2	449E3	175E2	342,0	**SRF 99x20**
100	**24**	6	8000	4,37	13	14	655,81	1825,82	0,07	29,7	61,7	771E2	259E3	836E1	200,0	**SRF 100x24**
120	**24**	6	8000	3,64	13	14	915,02	3027,05	0,07	51,1	88,8	160E3	598E3	224E2	363,0	**SRF 120x24**
120	**25**	5	8000	3,79	11	11	1127,43	4037,97	0,07	89,0	88,8	160E3	129E4	409E2	545,0	**SRF 120x25**
150	**36**	6	7200	4,37	13	14	1156,92	4108,09	0,07	103,3	138,7	390E3	190E4	676E2	719,0	**SRF 150x36**
150	**25**	5	7200	3,04	11	11	1596,53	6816,05	0,07	182,2	138,7	390E3	388E4	146E3	1227,0	**SRF 150x25**
180	**30**	5	5000	3,04	11	11	1962,34	9069,02	0,07	436,6	199,8	809E3	145E5	392E3	2573,0	**SRF 180x30**
210	**30**	5	3700	2,60	11	11	2295,60	11375,26	0,07	597,5	271,9	150E4	266E5	757E3	3771,0	**SRF 210x30**

Designation: page 87 - Symbols: page 86

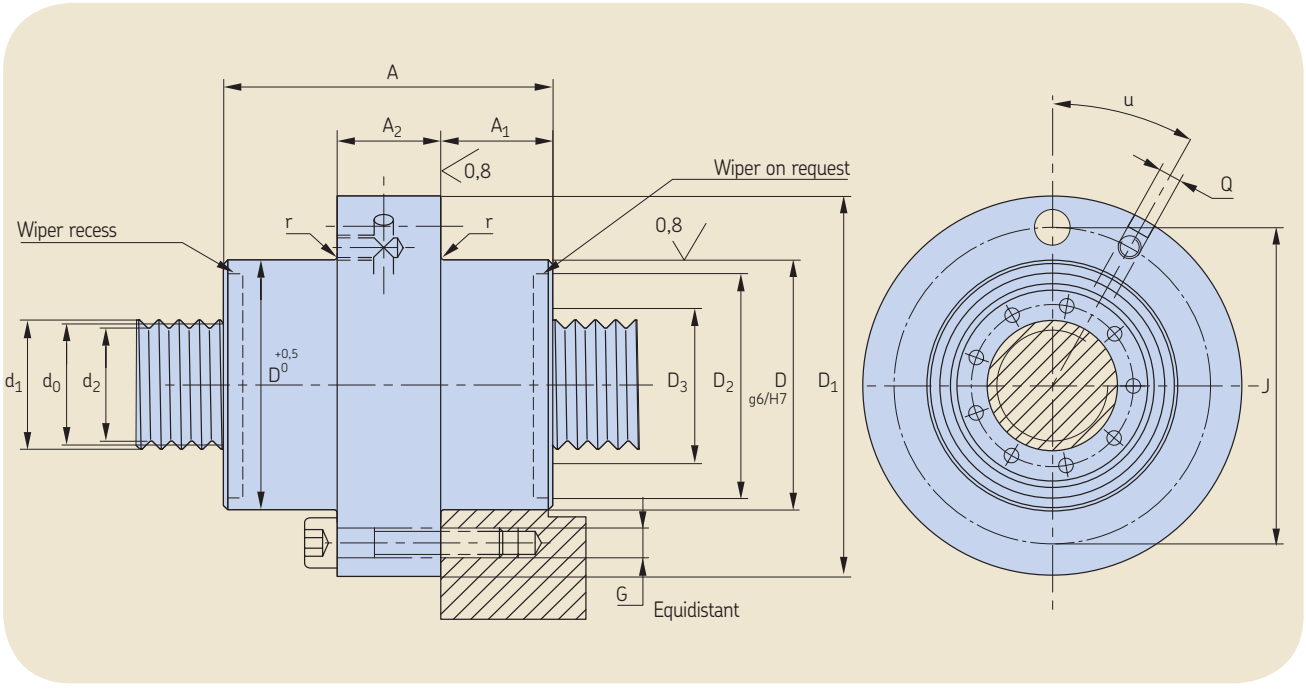

Designation	d_0	d_1	d_2	D	A h12	A_1	A_2	D_1	J js12	G	r +0,4	Q	u	B	D_2	D_3
	mm	mm	mm	mm	mm	mm	mm	mm	mm	mm	mm	mm	°	mm	mm	mm
SRF 75x10	75	75,8	73,7	**150**	191	73,0	45	210	180	8xM16	1,6	M8x1	22°30	10	136	87
SRF 75x15	75	76,2	73,1	**150**	191	73,0	45	210	180	8xM16	1,6	M8x1	22°30	10	136	87
SRF 75x20	75	76,5	72,5	**150**	191	73,0	45	210	180	8xM16	1,6	M8x1	22°30	10	136	87
SRF 80x12	80	80,8	78,7	**150**	156	55,5	45	210	180	8xM16	1,6	M8x1	22°30	12	132	92
SRF 80x18	80	81,2	78,1	**150**	156	55,5	45	210	180	8xM16	1,6	M8x1	22°30	12	132	92
SRF 80x24	80	81,5	77,5	**150**	156	55,5	45	210	180	8xM16	1,6	M8x1	22°30	12	132	92
SRF 80x36	80	82,3	76,3	**150**	156	55,5	45	210	180	8xM16	1,6	M8x1	22°30	12	132	92
SRF 80x42	80	82,7	75,7	**150**	156	55,5	45	210	180	8xM16	1,6	M8x1	22°30	12	132	92
SRF 99x20	99	100,5	96,5	**200**	260	102,5	55	275	245	12xM16	2,4	M8x1	15	12	180	112
SRF 100x24	100	101,5	97,5	**180**	195	72,5	50	255	220	12xM16	2,4	M8x1	15	12	162	116
SRF 120x24	120	121,5	117,5	**220**	240	92,5	55	295	260	12xM16	2,4	M8x1	15	12	196	136
SRF 120x25	120	121,9	116,9	**260**	280	112,5	55	340	305	12xM16	2,4	M12	15	12	220	180
SRF 150x36	150	152,3	146,3	**280**	305									13	250	200
SRF 150x25	150	151,9	146,9	**320**	400									13	280	230
SRF 180x30	180	182,3	176,3	**420**	515									13	340	250
SRF 210x30	210	212,3	206,3	**480**	550									20	385	280

Consult SKF

Preloaded cylindrical nuts, TRU for backlash elimination PRU for optimum rigidity

d_0 8 ▶ 36 mm

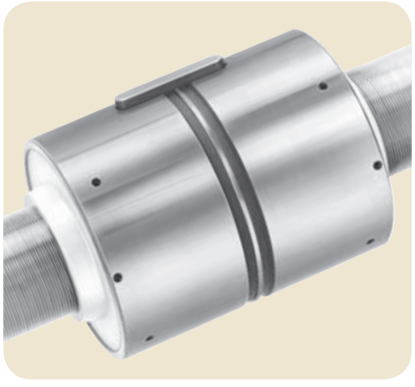

Standard

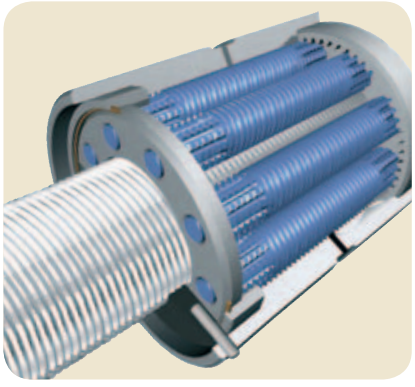

Threaded rollers

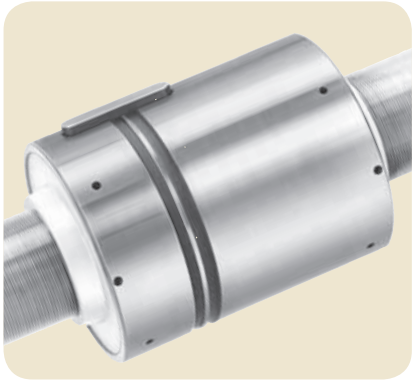

Customised

									TRU	PRU								
d_0	P_h	N	l_{tp}	α	N_r	Nmax	C_a	C_{oa}	T_{pe}	R_{ng}	R_{nr}	T_{pr}	F_{pr}	m_n	m_s	I_s	I_{nn}	I_{ns}	Z_n
mm	mm	—	mm	°			kN	kN	Nm	N/µm	N/µm	Nm	N	kg	kg/m	kgmm²/m	kgmm²	kgmm²	cm³
8	**4**	4	400	9,04	7	8	6,19	9,79	0,07	110	150	0,06 - 0,13	236	0,1	0,4	3,2	11,4	0,1	0,91
12	**5**	5	600	7,55	9	11	9,77	13,36	0,13	180	240	0,12 - 0,25	570	0,2	0,9	16,0	22,9	0,4	1,43
15	**5**	5	750	6,06	9	11	14,30	21,80	0,19	290	380	0,18 - 0,36	932	0,2	1,4	39,0	45,2	1,2	2,29
15	**8**	5	750	9,71	9	10	15,11	20,39	0,19	242	315	0,18 - 0,36	954	0,2	1,4	39,0	45,2	1,2	2,29
20	**6**	6	1050	5,45	11	14	14,78	22,43	0,30	290	380	0,26 - 0,58	1305	0,3	2,3	123,3	71,8	2,5	2,47
21	**5**	5	1100	4,33	9	11	27,85	40,98	0,33	400	520	0,31 - 0,63	1341	0,4	2,7	149,9	141,2	6,5	5,03
21	**6**	5	1100	5,20	9	11	29,08	41,09	0,33	359	467	0,31 - 0,63	1394	0,4	2,7	149,9	141,2	6,5	5,03
21	**8**	5	1100	6,95	9	11	30,00	39,03	0,33	311	404	0,31 - 0,63	1354	0,4	2,7	149,9	141,2	6,5	5,03
21	**10**	5	1100	8,62	9	10	32,64	41,51	0,33	200	260	0,31 - 0,63	557	0,4	2,7	149,9	141,2	6,5	5,03
24	**6**	6	1250	4,55	11	14	23,31	32,59	0,41	370	490	0,39 - 0,78	1597	0,5	3,6	255,7	173,2	6,3	4,24
24	**12**	6	1250	9,04	11	13	26,25	31,17	0,41	150	200	0,39 - 0,78	541	0,5	3,6	255,7	173,2	6,3	4,24
25	**5**	5	1300	3,64	8	11	34,85	54,12	0,44	460	600	0,42 - 0,84	1577	0,7	3,9	301,0	321,9	14,3	10,2
25	**10**	5	1300	7,26	8	11	40,02	52,65	0,44	290	380	0,42 - 0,84	1008	0,7	3,9	301,0	321,9	14,3	10,2
25	**15**	5	1300	10,81	8	10	43,62	53,20	0,44	180	230	0,42 - 0,84	426	0,7	3,9	301,0	321,9	14,3	10,2
30	**5**	5	1600	3,04	9	11	50,68	89,16	0,59	620	810	0,57 - 1,13	1844	1,2	5,6	624,2	762,4	36,2	13,7
30	**6**	5	1600	3,63	9	11	52,34	87,67	0,59	561	729	0,57 - 1,13	1780	1,2	5,6	624,2	762,4	36,2	13,7
30	**10**	5	1600	6,06	9	11	58,58	87,18	0,59	420	550	0,57 - 1,13	1472	1,2	5,6	624,2	762,4	36,2	13,7
30	**20**	5	1600	11,98	9	10	67,92	88,64	0,59	190	260	0,85 - 1,41	555	1,2	5,6	624,2	761,9	35,9	13,7
36	**6**	6	1900	3,04	11	14	49,83	89,69	0,80	770	1000	0,77 - 1,53	2334	1,2	8,0	129E1	22,8	45,7	13,4
36	**9**	6	1900	4,55	11	14	53,73	87,03	0,80	530	689	0,77 - 1,53	1960	1,2	8,0	129E1	922,8	45,7	13,4
36	**12**	6	1900	6,06	11	14	58,73	90,55	0,80	510	660	0,77 - 1,53	1820	1,2	8,0	129E1	873,1	45,7	13,4
36	**18**	6	1900	9,04	11	13	62,89	88,29	0,80	260	330	0,77 - 1,53	707	1,2	8,0	192E1	873,1	45,7	13,4
36	**24**	6	1900	11,98	11	12	68,10	92,19	0,80	240	310	1,15 - 1,91	649	1,2	8,0	129E1	873,1	45,7	13,4

Designation: page 87 - Symbols: page 86

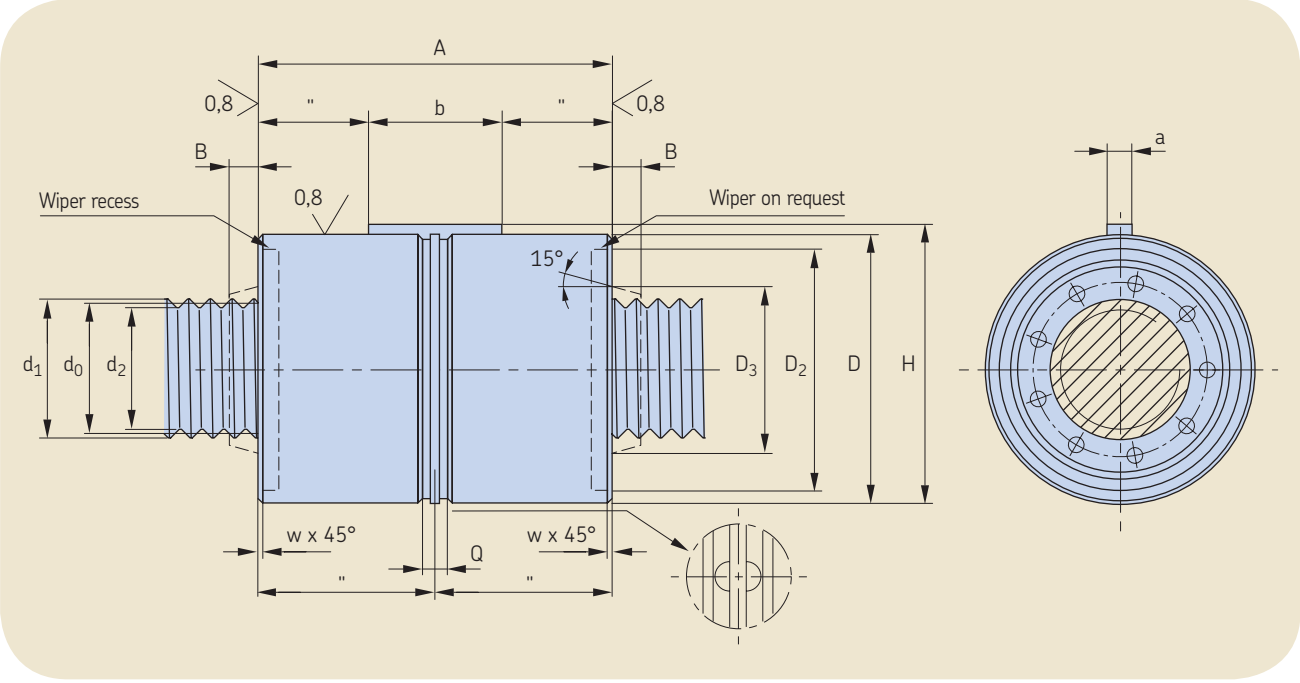

Designation	d_0	d_1	d_2	D g6/H7	A h12	w	a h9	b	H	Q	B	D_2	D_3
	mm	mm	mm	mm	mm	mm	mm	mm	mm	mm	mm	mm	mm
TRU/PRU 8x4	8	8,4	7,3	**25**	44	0,5	4	12	26,5	5	3	21,0	13
TRU/PRU 12x5	12	12,4	11,3	**30**	44	0,5	4	12	31,5	5	3	25,0	17
TRU/PRU 15x5	15	15,4	14,3	**35**	50	0,5	4	16	36,5	5	3	30,0	20
TRU/PRU 15x8	15	15,5	14,0	**35**	50	0,5	4	16	36,5	5	3	30,0	20
TRU/PRU 20x6	20	20,4	19,3	**40**	50	0,5	4	16	41,5	5	4	35,0	25
TRU/PRU 21x5	21	21,4	20,3	**45**	64	0,5	5	20	47,0	5	4	40,5	26
TRU/PRU 21x6	21	21,4	20,3	**45**	64	0,5	5	20	47,0	5	4	40,5	26
TRU/PRU 21x8	21	21,5	20,0	**45**	64	0,5	5	20	47,0	5	4	40,5	26
TRU/PRU 21x10	21	21,8	19,7	**45**	64	0,5	5	20	47,0	5	4	40,5	26
TRU/PRU 24x6	24	24,4	23,3	**48**	58	0,5	5	20	50,0	5	6	42,0	31
TRU/PRU 24x12	24	24,8	22,7	**48**	58	0,5	5	20	50,0	5	6	42,0	31
TRU/PRU 25x5	25	25,4	24,3	**53**	78	0,5	6	25	55,5	5	6	47,0	32
TRU/PRU 25x10	25	25,8	23,7	**53**	78	0,5	6	25	55,5	5	6	47,0	32
TRU/PRU 25x15	25	26,2	23,1	**53**	78	0,5	6	25	55,5	5	6	47,0	32
TRU/PRU 30x5	30	30,4	29,3	**64**	85	0,5	6	32	66,5	5	7	58,0	38
TRU/PRU 30x6	30	30,4	29,3	**64**	85	0,5	6	32	66,5	5	7	58,0	38
TRU/PRU 30x10	30	30,8	28,7	**64**	85	0,5	6	32	66,5	5	7	58,0	38
TRU/PRU 30x20	30	31,5	27,5	**64**	85	0,5	6	32	66,5	5	7	58,0	38
TRU/PRU 36x6	36	36,4	35,3	**68**	80	0,5	5	25	70,0	5	8	62,0	45
TRU/PRU 36x9	36	36,5	35,1	**68**	80	0,5	5	25	70,0	5	8	62,0	45
TRU/PRU 36x12	36	36,8	34,7	**68**	80	0,5	5	25	70,0	5	8	62,0	45
TRU/PRU 36x18	36	37,2	34,1	**68**	80	0,5	5	25	70,0	5	8	62,0	45
TRU/PRU 36x24	36	37,5	33,5	**68**	80	0,5	5	25	70,0	5	8	62,0	45

Preloaded cylindrical nuts, TRU for backlash elimination PRU for optimum rigidity

d_0 39 ▶ 64 mm

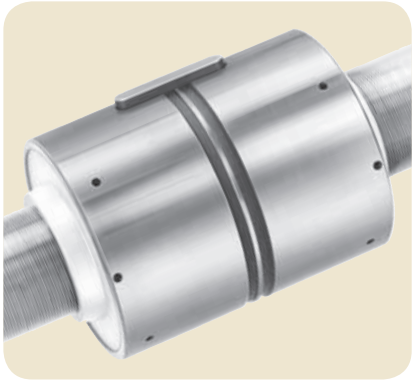

Standard

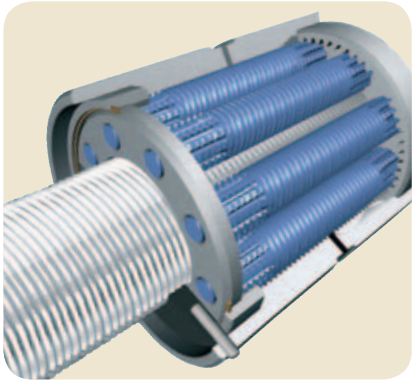

Threaded rollers

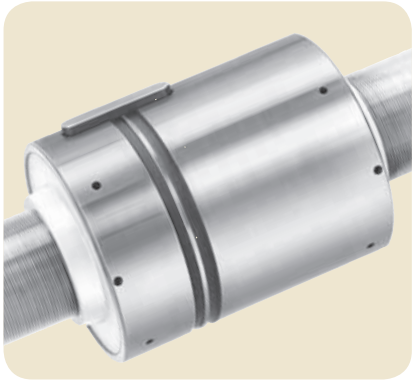

Customised

									TRU	PRU								
d_0	P_h	N	l_{tp}	α	N_r	Nmax	C_a	C_{oa}	T_{pe}	R_{ng}	R_{nr}	T_{pr}	F_{pr}	m_n	m_s	I_s	I_{nn}	I_{ns}	Z_n
mm	mm	—	mm	°			kN	kN	Nm	N/µm	N/µm	Nm	N	kg	kg/m	kgmm²/m	kgmm²	kgmm²	cm³
39	**5**	5	2100	2,34	9	12	71,19	134,46	0,92	750	980	0,88 - 1,75	2288	2,1	9,4	178E1	203E1	124,4	27,9
39	**10**	5	2100	4,67	9	11	84,09	135,46	0,92	500	650	0,88 - 1,75	1965	2,1	9,4	178E1	203E1	124,4	27,9
39	**15**	5	2100	6,98	9	11	92,36	136,45	0,92	390	510	0,88 - 1,75	1465	2,1	9,4	178E1	203E1	123,6	27,9
39	**20**	5	2100	9,27	9	10	95,22	130,45	0,92	220	290	0,88 - 1,75	694	2,1	9,4	178E1	203E1	123,6	27,9
39	**25**	5	2100	11,53	9	10	96,30	124,50	0,92	210	280	1,31 - 2,19	697	2,1	9,4	178E1	203E1	123,6	27,9
44	**8**	6	2400	3,30	11	14	71,89	130,73	1,12	688	895	1,07 - 2,14	2432	1,7	11,9	289E1	173E1	119,2	22,8
44	**12**	6	2400	4,96	11	14	79,18	131,44	1,12	610	800	1,07 - 2,14	2297	1,7	11,9	289E1	173E1	119,2	22,8
44	**18**	6	2400	7,42	11	13	86,91	132,47	1,12	430	550	1,07 - 2,14	1497	1,7	11,9	289E1	173E1	118,3	22,8
44	**24**	6	2400	9,85	11	13	92,46	133,48	1,12	290	380	1,07 - 2,14	725	1,7	11,9	289E1	173E1	118,3	22,8
44	**30**	6	2400	12,24	11	12	91,38	123,22	1,12	190	250	1,60 - 2,68	727	1,7	11,9	289E1	173E1	118,3	22,8
48	**5**	5	2600	1,90	9	12	109,13	240,77	1,30	1080	1410	1,24 - 2,47	2698	4,2	14,2	409E1	652E1	370,8	54,0
48	**8**	5	2600	3,03	9	11	120,34	235,30	1,30	889	1156	1,24 - 2,47	2583	4,2	14,2	409E1	652E1	370,8	54,0
48	**10**	5	2600	3,79	9	11	127,57	237,56	1,30	760	980	1,24 - 2,47	2405	4,2	14,2	409E1	652E1	370,8	54,0
48	**15**	5	2600	5,68	9	11	142,01	243,18	1,30	600	780	1,24 - 2,47	2072	4,2	14,2	409E1	652E1	370,8	54,0
48	**20**	5	2600	7,55	9	11	146,38	231,14	1,30	460	600	1,24 - 2,47	1423	4,2	14,2	409E1	652E1	370,8	54,0
48	**25**	5	2600	9,41	9	10	157,50	245,52	1,30	320	480	1,24 - 2,47	782	4,2	14,2	409E1	652E1	369,6	54,0
56	**12**	6	3100	3,90	11	14	116,90	216,56	1,68	810	1060	1,60 - 3,19	2952	3,2	19,3	758E1	500E1	385,3	46,2
56	**24**	6	3100	7,77	11	13	133,45	209,58	1,68	410	530	1,60 - 3,19	1579	3,2	19,3	758E1	500E1	383,1	46,2
56	**36**	6	3100	11,56	11	12	142,33	212,12	1,68	290	370	2,39 - 3,99	910	3,2	19,3	758E1	500E1	383,1	46,2
60	**10**	5	3400	3,04	9	11	186,53	389,85	1,88	1030	1340	1,79 - 3,58	2913	7,3	22,2	999E1	165E2	110E1	103
60	**15**	5	3400	4,55	9	11	205,54	391,35	1,88	830	1080	1,79 - 3,58	2635	7,3	22,2	999E1	165E2	110E1	103
60	**20**	5	3400	6,06	9	11	217,61	392,83	1,88	700	910	1,79 - 3,58	2326	7,3	22,2	999E1	164E2	110E1	103
64	**12**	6	3650	3,42	14	14	165,57	381,65	2,09	930	1200	1,99 - 3,98	3328	5,4	25,3	129E2	106E2	984,3	46,2
64	**18**	6	3650	5,12	13	14	176,93	362,78	2,09	790	1030	1,99 - 3,98	2900	5,2	25,3	129E2	105E2	914,0	54,0
64	**24**	6	3650	6,81	13	13	183,76	344,81	2,09	640	840	1,99 - 3,98	2318	5,2	25,3	129E2	105E2	911,2	54,0
64	**30**	6	3650	8,49	11	13	177,73	309,92	2,09	440	570	1,99 - 3,98	1292	4,9	25,3	129E2	103E2	771,0	69,4
64	**36**	6	3650	10,15	11	13	172,69	294,69	2,09	350	450	1,99 - 3,98	892	4,9	25,3	129E2	103E2	771,0	69,4

Designation: page 87 - Symbols: page 86

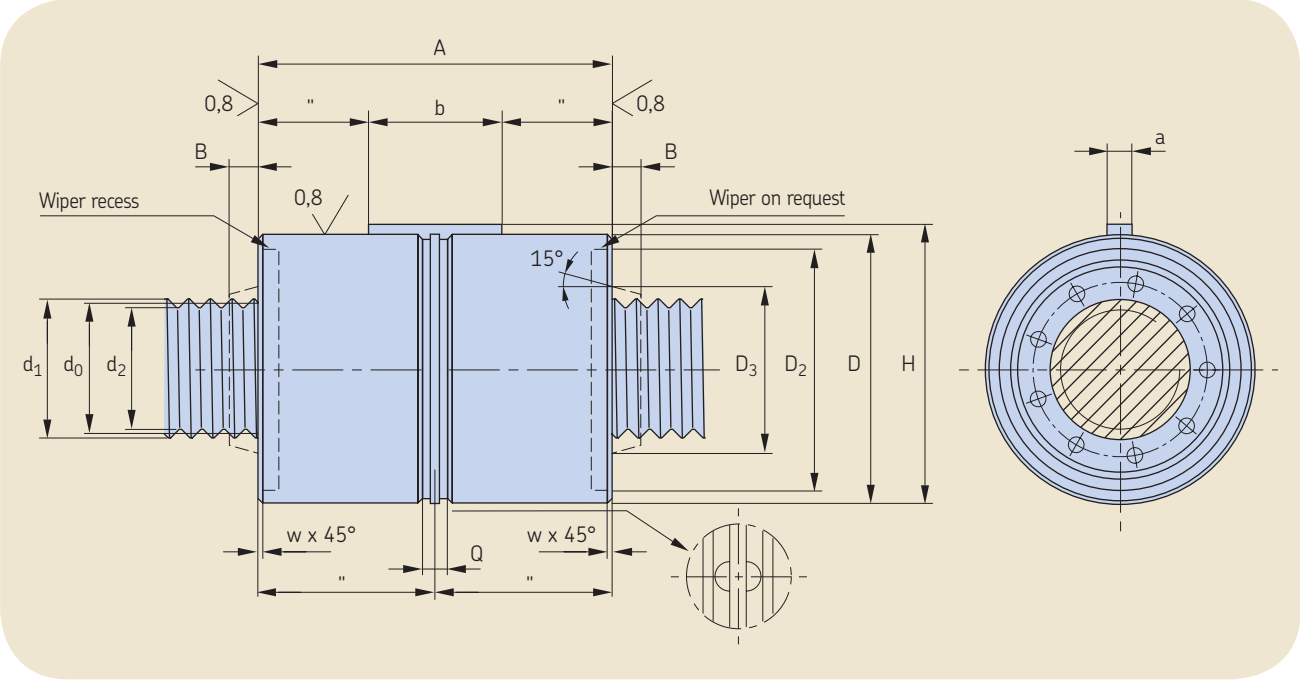

Designation		d_0	d_1	d_2	D g6/H7	A h12	w	a h9	b	H	Q	B	D_2	D_3
		mm	mm	mm	mm	mm	mm	mm	mm	mm	mm	mm	mm	mm
TRU/PRU	39x5	39	39,4	38,3	**80**	100	1,0	8	40	83,0	7,0	8	73	50
TRU/PRU	39x10	39	39,8	37,7	**80**	100	1,0	8	40	83,0	7,0	8	37	50
TRU/PRU	39x15	39	40,2	37,1	**80**	100	1,0	8	40	83,0	7,0	8	73	50
TRU/PRU	39x20	39	40,5	36,5	**80**	100	1,0	8	40	83,0	7,0	8	73	50
TRU/PRU	39x25	39	40,9	35,9	**80**	100	1,0	8	40	83,0	7,0	8	73	50
TRU/PRU	44x8	44	44,4	43,2	**80**	90	0,5	6	32	82,5	7,0	8	74	56
TRU/PRU	44x12	44	44,8	42,7	**80**	90	0,5	6	32	82,5	7,0	8	74	56
TRU/PRU	44x18	44	45,2	42,1	**80**	90	0,5	6	32	82,5	7,0	8	74	56
TRU/PRU	44x24	44	45,5	41,5	**80**	90	0,5	6	32	82,5	7,0	8	74	56
TRU/PRU	44x30	44	45,9	40,9	**80**	90	0,5	6	32	82,5	7,0	8	74	56
TRU/PRU	48x5	48	48,4	47,3	**100**	127	1,0	8	45	103,0	7,0	9	90	60
TRU/PRU	48x8	48	48,6	47,1	**100**	127	1,0	8	45	103,0	7,0	9	90	60
TRU/PRU	48x10	48	48,8	46,7	**100**	127	1,0	8	45	103,0	7,0	9	90	60
TRU/PRU	48x15	48	49,2	46,1	**100**	127	1,0	8	45	103,0	7,0	9	90	60
TRU/PRU	48x20	48	49,5	45,5	**100**	127	1,0	8	45	103,0	7,0	9	90	60
TRU/PRU	48x25	48	49,9	44,9	**100**	127	1,0	8	45	103,0	7,0	9	90	60
TRU/PRU	56x12	56	56,8	54,7	**100**	112	1,0	8	40	103,0	7,0	9	93	66
TRU/PRU	56x24	56	57,5	53,5	**100**	112	1,0	8	40	103,0	7,0	9	93	66
TRU/PRU	56x36	56	58,3	52,3	**100**	112	1,0	8	40	103,0	7,0	9	93	66
TRU/PRU	60x10	60	60,8	58,7	**122**	152	1,0	10	45	125,0	10,5	9	110	71
TRU/PRU	60x15	60	61,2	58,1	**122**	152	1,0	10	45	125,0	10,5	9	110	71
TRU/PRU	60x20	60	61,5	57,5	**122**	152	1,0	10	45	125,0	10,5	9	110	71
TRU/PRU	64x12	64	64,8	62,7	**115**	129	1,0	8	45	118,0	7,0	11	106	75
TRU/PRU	64x18	64	65,2	62,1	**115**	129	1,0	8	45	118,0	7,0	11	106	75
TRU/PRU	64x24	64	65,5	61,5	**115**	129	1,0	8	45	118,0	7,0	11	106	75
TRU/PRU	64x30	64	65,9	60,9	**115**	129	1,0	8	45	118,0	7,0	11	106	75
TRU/PRU	64x36	64	66,3	60,3	**115**	129	1,0	8	45	118,0	7,0	11	106	75

Preloaded flanged nuts, TRK for backlash elimination
PRK for optimum rigidity

d_0 8 ▶ 36 mm

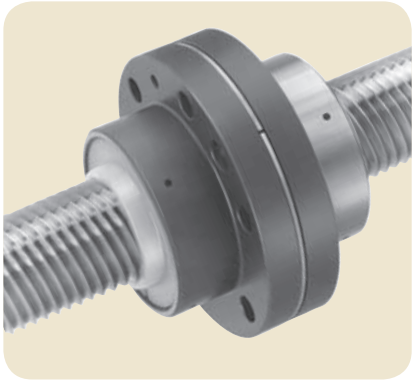

Standard

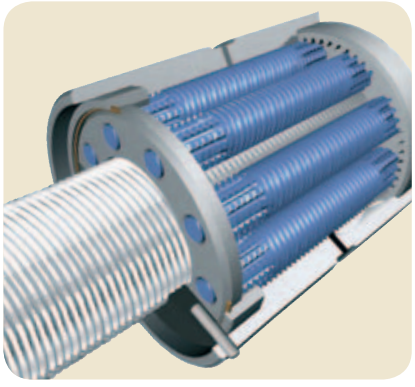

Threaded rollers

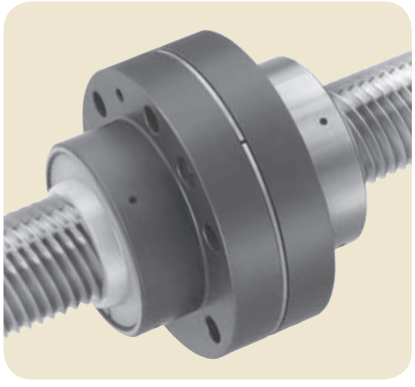

Customised

									TRK	PRK									
d_0	P_h	N	l_{tp}	α		N_r	Nmax	C_a	C_{oa}	T_{pe}	R_{ng}	R_{nr}	T_{pr}	F_{pr}	m_n	m_s	I_s	I_{nn}	I_{ns}	Z_n
mm	mm	—	mm	°				kN	kN	Nm	N/µm	N/µm	Nm	N	kg	kg/m	kgmm²/m	kgmm²	kgmm²	cm³
8	**4**	4	400	9,04		7	8	6,19	9,79	0,07	110	150	0,06 - 0,13	236	0,3	0,4	3,2	66,4	0,1	0,91
12	**5**	5	600	7,55		9	11	9,77	13,36	0,13	180	240	0,12 - 0,25	570	0,3	0,9	16,0	106,0	0,4	1,43
15	**5**	5	750	6,06		9	11	14,30	21,80	0,19	290	380	0,18 - 0,36	932	0,5	1,4	39,0	201,6	1,2	2,29
15	**8**	5	750	9,71		9	10	15,11	20,39	0,19	242	315	0,18 - 0,36	954	0,5	1,4	39,0	201,6	1,2	2,29
20	**6**	6	1050	5,45		11	14	14,78	22,43	0,30	290	380	0,26 - 0,58	1305	0,5	2,3	123,3	289,5	2,5	2,47
21	**5**	5	1100	4,33		9	11	27,85	40,98	0,33	400	520	0,31 - 0,63	1341	0,7	2,7	149,9	436,6	6,5	5,03
21	**6**	5	1100	5,20		9	11	29,08	41,09	0,33	359	467	0,31 - 0,63	1394	0,7	2,7	149,9	436,6	6,5	5,03
21	**8**	5	1100	6,95		9	11	30,00	39,03	0,33	311	404	0,31 - 0,63	1354	0,7	2,7	149,9	436,6	6,5	5,03
21	**10**	5	1100	8,62		9	10	32,64	41,51	0,33	200	260	0,31 - 0,63	557	0,7	2,7	149,9	436,6	6,5	5,03
24	**6**	6	1250	4,55		11	14	23,31	32,59	0,41	370	490	0,39 - 0,78	1597	0,8	3,6	255,7	524,2	6,3	4,24
24	**12**	6	1250	9,04		11	13	26,25	31,17	0,41	150	200	0,39 - 0,78	541	0,8	3,6	255,7	524,2	6,3	4,24
25	**5**	5	1300	3,64		8	11	34,85	54,12	0,44	460	600	0,42 - 0,84	1577	1,4	3,9	301,0	120E1	14,3	10,20
25	**10**	5	1300	7,26		8	11	40,02	52,65	0,44	290	380	0,42 - 0,84	1008	1,4	3,9	301,0	120E1	14,3	10,20
25	**15**	5	1300	10,81		8	10	43,62	53,20	0,44	180	230	0,42 - 0,84	426	1,4	3,9	301,0	120E1	14,3	10,20
30	**5**	5	1600	3,04		9	11	50,68	89,16	0,59	620	810	0,57 - 1,13	1844	2,1	5,6	624,2	268E1	36,2	13,70
30	**6**	5	1600	3,63		9	11	52,34	87,67	0,59	561	729	0,57 - 1,13	1780	2,1	5,6	624,2	268E1	36,2	13,70
30	**10**	5	1600	6,06		9	11	58,58	87,18	0,59	420	550	0,57 - 1,13	1472	2,1	5,6	624,2	268E1	36,2	13,70
30	**20**	5	1600	11,98		9	10	67,92	88,64	0,59	190	260	0,85 - 1,41	555	2,1	5,6	624,2	268E1	35,9	13,70
36	**6**	6	1900	3,04		11	14	49,83	89,69	0,80	770	1000	0,77 - 1,53	2334	2,1	8,0	129E1	317E1	45,7	13,40
36	**9**	6	1900	4,55		11	14	53,73	87,03	0,80	530	689	0,77 - 1,53	1960	2,1	8,0	129E1	317E1	45,7	13,40
36	**12**	6	1900	6,06		11	14	58,73	90,55	0,80	510	660	0,77 - 1,53	1820	2,1	8,0	129E1	312E1	45,7	13,40
36	**18**	6	1900	9,04		11	13	62,89	88,29	0,80	260	330	0,77 - 1,53	707	2,1	8,0	192E1	312E1	45,7	13,40
36	**24**	6	1900	11,98		11	12	68,10	92,19	0,80	240	310	1,15 - 1,91	649	2,1	8,0	129E1	312E1	45,7	13,40

Designation: page 87 - Symbols: page 86

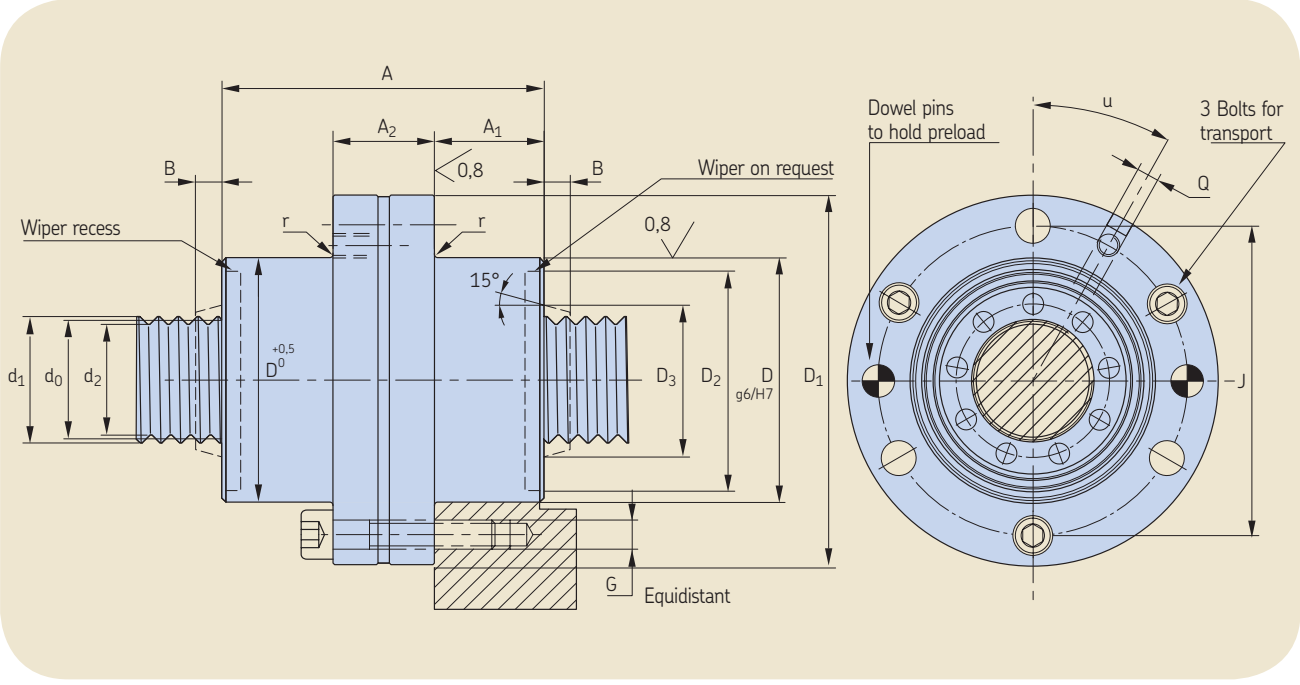

Designation	d_0	d_1	d_2	D	A h12	A_1	A_2	D_1	J js12	G	r +0,4	Q	u	B	D_2	D_3
	mm	mm	mm	mm	mm	mm	mm	mm	mm	mm	mm	mm	°	mm	mm	mm
TRK/PRK 8x4	8	8,4	7,3	**25**	44	14,0	16	46	36	6xM4	0,4	M6	30	3	21,0	13
TRK/PRK 12x5	12	12,4	11,3	**30**	44	14,0	16	51	41	6xM4	0,4	M6	30	3	25,0	17
TRK/PRK 15x5	15	15,4	14,3	**35**	50	16,0	18	58	46	6xM5	0,4	M6	30	3	30,0	20
TRK/PRK 15x8	15	15,5	14,0	**35**	50	16,0	18	58	46	6xM5	0,4	M6	30	3	30,0	20
TRK/PRK 20x6	20	20,4	19,3	**40**	50	16,0	18	63	51	6xM5	0,8	M6	30	4	35,0	25
TRK/PRK 21x5	21	21,4	20,3	**45**	64	23,0	18	68	56	6xM5	0,8	M6	30	4	40,5	26
TRK/PRK 21x6	21	21,0	20,3	**45**	64	23,0	18	68	56	6xM5	0,8	M6	30	4	40,5	26
TRK/PRK 21x8	21	21,0	20,0	**45**	64	23,0	18	68	56	6xM5	0,8	M6	30	4	40,5	26
TRK/PRK 21x10	21	21,8	19,7	**45**	64	23,0	18	68	56	6xM5	0,8	M6	30	4	40,5	26
TRK/PRK 24x6	24	24,4	23,3	**48**	58	20,0	18	71	59	6xM5	0,8	M6	30	6	42,0	31
TRK/PRK 24x12	24	24,8	22,7	**48**	58	20,0	18	71	59	6xM5	0,8	M6	30	6	42,0	31
TRK/PRK 25x5	25	25,4	24,3	**56**	78	29,0	20	84	70	6xM6	0,8	M6	30	6	47,0	32
TRK/PRK 25x10	25	25,8	23,7	**56**	78	29,0	20	84	70	6xM6	0,8	M6	30	6	47,0	32
TRK/PRK 25x15	25	26,2	23,1	**56**	78	29,0	20	84	70	6xM6	0,8	M6	30	6	47,0	32
TRK/PRK 30x5	30	30,4	29,3	**64**	85	29,0	27	98	81	6xM8	0,8	M6	30	7	58,0	38
TRK/PRK 30x6	30	30,8	29,3	**64**	85	29,0	27	98	81	6xM8	0,8	M6	30	7	58,0	38
TRK/PRK 30x10	30	31,8	28,7	**64**	85	29,0	27	98	81	6xM8	0,8	M6	30	7	58,0	38
TRK/PRK 30x20	30	31,5	27,5	**64**	85	29,0	27	98	81	6xM8	0,8	M6	30	7	58,0	38
TRK/PRK 36x6	36	36,4	35,3	**68**	80	26,5	27	102	85	6xM8	0,8	M6	30	8	62,0	45
TRK/PRK 36x9	36	36,5	35,1	**68**	80	26,5	27	102	85	6xM8	0,8	M6	30	8	62,0	45
TRK/PRK 36x12	36	36,8	34,7	**68**	80	26,5	27	102	85	6xM8	0,8	M6	30	8	62,0	45
TRK/PRK 36x18	36	37,2	34,1	**68**	80	26,5	27	102	85	6xM8	0,8	M6	30	8	62,0	45
TRK/PRK 36x24	36	37,5	33,5	**68**	80	26,5	27	102	85	6xM8	0,8	M6	30	8	62,0	45

Preloaded flanged nuts, TRK for backlash elimination PRK for optimum rigidity

d_0 39 ▶ 64 mm

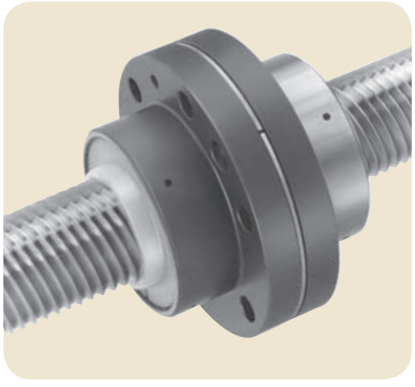

Standard

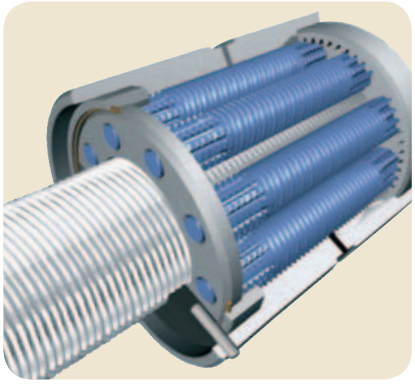

Threaded rollers

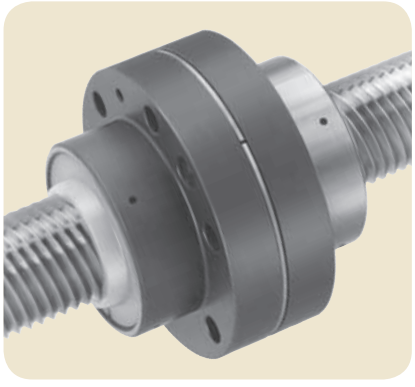

Customised

									TRK	PRK									
d_0	P_h	N	l_{tp}	α		N_r	Nmax	C_a	C_{oa}	T_{pe}	R_{ng}	R_{nr}	T_{pr}	F_{pr}	m_n	m_s	I_s	I_{nn}	I_{ns}	Z_n
mm	mm	—	mm	°				kN	kN	Nm	N/µm	N/µm	Nm	N	kg	kg/m	kgmm²/m	kgmm²	kgmm²	cm³
39	**5**	5	2100	2,34		9	12	71,19	134,46	0,92	750	980	0,88 - 1,75	2288	4,0	9,4	178E1	836E1	124,4	27,90
39	**10**	5	2100	4,67		9	11	84,09	135,46	0,92	500	650	0,88 - 1,75	1965	4,0	9,4	178E1	836E1	124,4	27,90
39	**15**	5	2100	6,98		9	11	92,36	136,45	0,92	390	510	0,88 - 1,75	1465	4,0	9,4	178E1	836E1	123,6	27,90
39	**20**	5	2100	9,27		9	10	95,22	130,45	0,92	220	290	0,88 - 1,75	694	4,0	9,4	178E1	836E1	123,6	27,90
39	**25**	5	2100	11,53		9	10	96,30	124,50	0,92	210	280	1,31 - 2,19	697	4,0	9,4	178E1	836E1	123,6	27,90
44	**8**	6	2400	3,30		11	14	71,89	130,73	1,12	761	989	1,07 - 2,14	3445	3,6	11,9	289E1	802E1	119,2	22,81
44	**12**	6	2400	4,96		11	14	79,18	131,44	1,12	610	800	1,07 - 2,14	2297	3,6	11,9	289E1	802E1	119,2	22,81
44	**18**	6	2400	7,42		11	13	86,91	132,47	1,12	430	550	1,07 - 2,14	1497	3,6	11,9	289E1	802E1	118,3	22,81
44	**24**	6	2400	9,85		11	13	92,46	133,48	1,12	290	380	1,07 - 2,14	725	3,6	11,9	289E1	802E1	118,3	22,81
44	**30**	6	2400	12,24		11	12	91,38	123,22	1,12	190	250	1,60 - 2,68	724	3,6	11,9	289E1	802E1	118,3	22,81
48	**5**	5	2600	1,90		9	12	109,13	240,77	1,30	1080	1410	1,24 - 2,47	2698	7,7	14,2	409E1	230E2	370,8	53,95
48	**8**	5	2600	3,03		9	11	120,34	235,30	1,30	889	1156	1,24 - 2,47	2583	7,7	14,2	409E1	230E2	370,8	53,95
48	**10**	5	2600	3,79		9	11	127,57	237,56	1,30	760	980	1,24 - 2,47	2405	7,7	14,2	409E1	230E2	370,8	53,95
48	**15**	5	2600	5,68		9	11	142,01	243,18	1,30	600	780	1,24 - 2,47	2072	7,7	14,2	409E1	230E2	370,8	53,95
48	**20**	5	2600	7,55		9	11	146,38	231,14	1,30	460	600	1,24 - 2,47	1423	7,7	14,2	409E1	230E2	370,8	53,95
48	**25**	5	2600	9,41		9	10	157,50	245,52	1,30	320	420	1,24 - 2,47	782	7,7	14,2	409E1	230E2	369,6	53,95
56	**12**	6	3100	3,90		11	14	116,90	216,56	1,68	810	1060	1,60 - 3,19	2952	6,5	19,3	758E1	213E2	385,3	46,18
56	**24**	6	3100	7,77		11	13	133,45	209,58	1,68	410	530	1,60 - 3,19	1579	6,5	19,3	758E1	213E2	383,1	46,18
56	**36**	6	3100	11,56		11	12	142,33	212,12	1,68	290	370	2,39 - 3,99	910	6,5	19,3	758E1	213E2	383,1	46,18
60	**10**	5	3400	3,04		9	11	186,53	389,85	1,88	1030	1340	1,79 - 3,58	2913	12,1	22,2	999E1	528E2	110E1	102,6
60	**15**	5	3400	4,55		9	11	205,54	391,35	1,88	830	1080	1,79 - 3,58	2635	12,1	22,2	999E1	528E2	110E1	102,6
60	**20**	5	3400	6,06		9	11	217,61	392,83	1,88	700	910	1,79 - 3,58	2326	12,1	22,2	999E1	528E2	110E1	102,6
64	**12**	6	3650	3,42		14	14	165,57	381,65	2,09	930	1200	1,99 - 3,98	3328	11,3	25,3	129E2	502E2	984,3	46,24
64	**18**	6	3650	5,12		13	14	176,93	362,78	2,09	790	1030	1,99 - 3,98	2900	11,3	25,3	129E2	502E2	914,0	46,24
64	**24**	6	3650	6,81		13	13	183,76	344,81	2,09	640	840	1,99 - 3,98	2318	11,3	25,3	129E2	502E2	911,2	46,24
64	**30**	6	3650	8,49		11	13	177,73	309,92	2,09	440	570	1,99 - 3,98	1292	11,3	25,3	129E2	502E2	771,0	46,24
64	**36**	6	3650	10,15		11	13	172,69	294,69	2,09	350	450	1,99 - 3,98	892	11,3	25,3	129E2	502E2	771,0	46,24

Designation: page 87 - Symbols: page 86

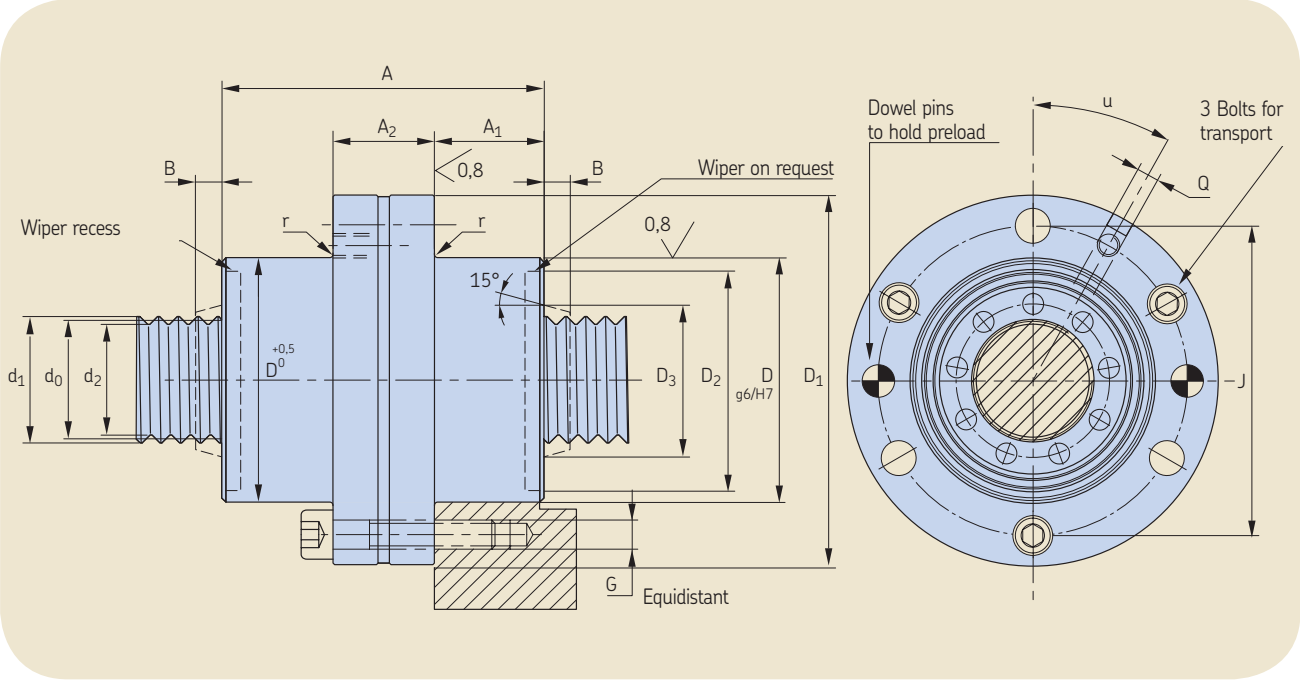

Designation		d_0	d_1	d_2	D	A h12	A_1	A_2	D_1	J js12	G	r +0,4	Q	u	B	D_2	D_3
		mm	mm	mm	mm	mm	mm	mm	mm	mm	mm	mm	mm	°	mm	mm	mm
TRK/PRK	39x5	39	39,4	38,3	**82**	100	33,5	33	124	102	6xM10	1,2	M6	30	8	73	50
TRK/PRK	39x10	39	39,8	37,7	**82**	100	33,5	33	124	102	6xM10	1,2	M6	30	8	73	50
TRK/PRK	39x15	39	40,2	37,1	**82**	100	33,5	33	124	102	6xM10	1,2	M6	30	8	73	50
TRK/PRK	39x20	39	40,5	36,5	**82**	100	33,5	33	124	102	6xM10	1,2	M6	30	8	73	50
TRK/PRK	39x25	39	40,9	35,9	**82**	100	33,5	33	124	102	6xM10	1,2	M6	30	8	73	50
TRK/PRK	44x8	44	44,4	43,2	**82**	90	28,5	33	124	102	6xM10	1,2	M6	30	8	74	56
TRK/PRK	44x12	44	44,8	42,7	**82**	90	28,5	33	124	102	6xM10	1,2	M6	30	8	74	56
TRK/PRK	44x18	44	45,2	42,1	**82**	90	28,5	33	124	102	6xM10	1,2	M6	30	8	74	56
TRK/PRK	44x24	44	45,5	41,5	**82**	90	28,5	33	124	102	6xM10	1,2	M6	30	8	74	56
TRK/PRK	44x30	44	45,9	40,9	**82**	90	28,5	33	124	102	6xM10	1,2	M6	30	8	74	56
TRK/PRK	48x5	48	48,4	47,3	**105**	127	45	37	150	127	6xM12	1,2	M8x1	30	9	90	60
TRK/PRK	48x8	48	48,6	47,1	**105**	127	45	37	150	127	6xM12	1,2	M8x1	30	9	90	60
TRK/PRK	48x10	48	48,8	46,7	**105**	127	45	37	150	127	6xM12	1,2	M8x1	30	9	90	60
TRK/PRK	48x15	48	49,2	46,1	**105**	127	45	37	150	127	6xM12	1,2	M8x1	30	9	90	60
TRK/PRK	48x20	48	49,5	45,5	**105**	127	45	37	150	127	6xM12	1,2	M8x1	30	9	90	60
TRK/PRK	48x25	48	49,9	44,9	**105**	127	45	37	150	127	6xM12	1,2	M8x1	30	9	90	60
TRK/PRK	56x12	56	56,8	54,7	**105**	112	37,5	37	150	127	6xM12	1,2	M8x1	30	9	93	66
TRK/PRK	56x24	56	57,5	53,5	**105**	112	37,5	37	150	127	6xM12	1,2	M8x1	30	9	93	66
TRK/PRK	56x36	56	58,3	52,3	**105**	112	37,5	37	150	127	6xM12	1,2	M8x1	30	9	93	66
TRK/PRK	60x10	60	60,8	58,7	**122**	152	53,5	45	180	150	6xM16	1,6	M8x1	30	9	110	71
TRK/PRK	60x15	60	61,2	58,1	**122**	152	53,5	45	180	150	6xM16	1,6	M8x1	30	9	110	71
TRK/PRK	60x20	60	61,5	57,5	**122**	152	53,5	45	180	150	6xM16	1,6	M8x1	30	9	110	71
TRK/PRK	64x12	64	64,8	62,7	**120**	129	42	45	180	150	6xM16	1,6	M8x1	30	11	106	75
TRK/PRK	64x18	64	65,2	62,1	**120**	129	42	45	180	150	6xM16	1,6	M8x1	30	11	106	75
TRK/PRK	64x24	64	65,5	61,5	**120**	129	42	45	180	150	6xM16	1,6	M8x1	30	11	106	75
TRK/PRK	64x30	64	65,9	60,9	**120**	129	42	45	180	150	6xM16	1,6	M8x1	30	11	106	75
TRK/PRK	64x36	64	66,3	60,3	**120**	129	42	45	180	150	6xM16	1,6	M8x1	30	11	106	75

Flanged thrust bearing units

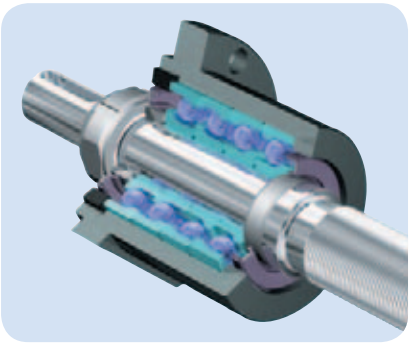

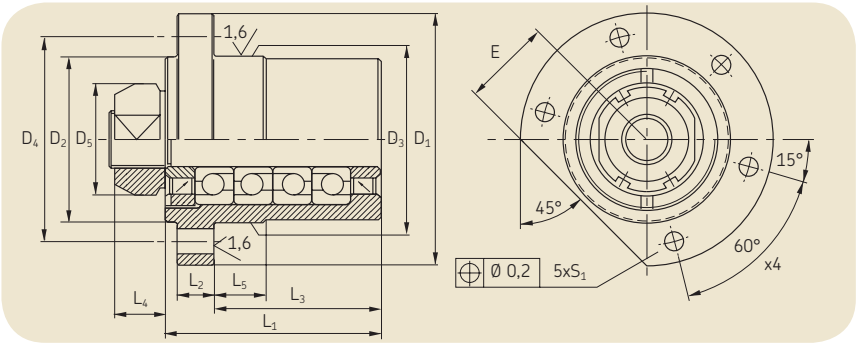

In standard version, the “FLRBU” thrust bearing unit is assembled according to drawing page 30 or 31. If you require a different assembly, please indicate it when ordering. Greased for life with SKF LGEP2.

	Angular contact ball bearing (40°)							Lock nut				
	Basic load rating (axial)		Number of bearings	Bearings designation	Maximum preload torque *	Axial rigidity	Tilt rigidity	High precision KMT nut				
Flanged bearing unit designation	C_a	C_{oa}						Designation	Hook spanner	Tightening torque (Nm)	Grub screws Size	Max. tightening torque (Nm)
	kN	kN			Nm	N/µm	Nm/mrad			Nm		
FLRBU1	13,3	14,7	2	7201 BEGBP	0.10	150	40	KMT 1	HN 3	10	M5	4,5
FLRBU2	27.9	31.9	2	7303 BEGBP	0.25	190	51	KMT 3	HN 4	15	M6	8
FLRBU3	40.1	63.8	4	7204 BEGBP	0.25	400	140	KMT 4	HN 5	18	M6	8
FLRBU4	74.2	119.2	4	7305 BEGBP	1.10	450	160	KMT 5	HN 5	25	M6	8
FLRBU5	109.4	188.4	4	7307 BEGBP	1.10	600	715	KMT 7	HN 7	42	M6	8
FLRBU6	208.8	392.3	4	7310 BEGBP	1.50	750	1000	KMT 10	HN 10	70	M8	18
FLRBU7	305,3	615,4	4	7313 BEGBP	2.00	1250	3200	KMT 13	HN 14	100	M8	18
FLRBU8	473,1	1123	4	7318 BEGBP	2.30	1500	7500	KMT 18	HN 18	160	M10	35

Dimensions (mm)													
Flanged bearing unit designation	L_1	L_2	L_3	L_4	D1	D2	D3 h7	D4	D5	S_1 H13	Fixing screws	E	L_5
FLRBU1	42	10	25.0	14	76	50	47	63	30	6.6	M6 × 25	27	12,0
FLRBU2	46	10	32.0	18	90	62	60	76	37	6.6	M6 × 25	32	18,0
FLRBU3	77	13	60.0	18	90	59	60	74	40	9.0	M8 × 25	32	30,0
FLRBU4	89	16	68.0	20	120	80	80	100	44	11.0	M10 × 30	44	36,0
FLRBU5	110	20	82.0	22	140	99	100	120	54	13.0	M12 × 40	54	47,0
FLRBU6	140	25	98.5	25	171	130	130	152	75	13.0	M12 × 40	67	58,5
FLRBU7	180	30	133.5	28	225	170	170	198	95	17.5	M16 × 55	87	53,5
FLRBU8	235	35	174.0	32	285	219	219	252	125	22.0	M20	115	99,0

* Preload torque measured at 50 rpm with SKF LGEP2 as lubricant.

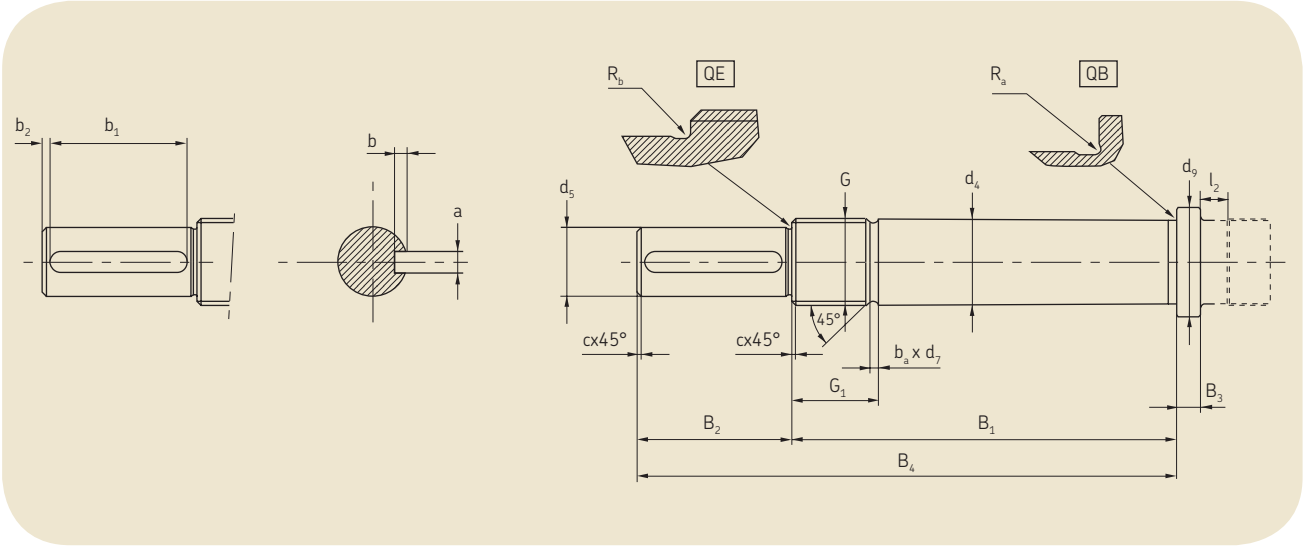

Dimensions (mm)																		
Thrust bearing units	d_4 h6	d_5 h7	d_9	B_1 js12	B_2	B_4 js12	B_3	G 6g	G_1	c	b_a	d_7 h11	R_a	R_b	a N9	b +0.100 0	b_1 +0.5 0	b_2
FLRBU1	12	10	17	58	20	78	5	M12 × 1	17	0.5	1.5	10.5	0.4	0.4	3	1.8	16	1.5
FLRBU2	17	15	23	66	30	96	5	M17 × 1	22	0.5	1.5	15.5	0.6	0.6	5	3.0	25	2.0
FLRBU3	20	17	27	97	40	137	7	M20 × 1	22	0.5	1.5	18.5	0.6	0.6	5	3.0	35	2.0
FLRBU4	25	20	34	112	45	157	7	M25 × 1.5	25	0.5	2.3	22.8	0.6	0.6	6	3.5	40	2.5
FLRBU5	35	30	45	134	55	189	10	M35 × 1.5	26	1	2.3	32.8	0.6	0.6	8	4.0	45	2.5
FLRBU6	50	40	62	168	65	233	12	M50 × 1.5	31	1	2.3	47.8	0.8	0.8	12	5.0	55	4.0
FLRBU7	65	60	78	210	100	310	18	M65 × 2	32	1	3.0	62.2	1.2	1.0	18	7.0	90	2.5
FLRBU8	90	85	108	270	120	390	25	M90 × 2	39	1	3.0	87.2	1.6	1.2	25	9.0	100	5.0

Undercut l_2 is defined p20.
d_9 can be equal to the root diameter for some sizes.

Other possible bearing arrangement

In case of load acting mainly in one direction, we recommend following thrust bearings.

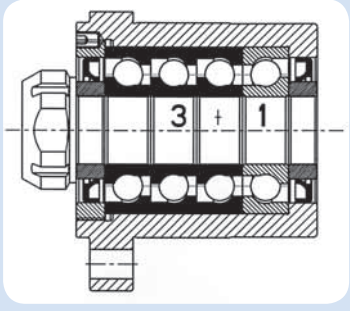

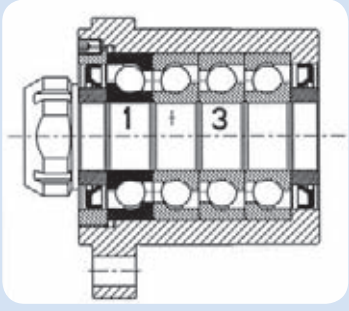

	C_a (kN)	C_{oa} (kN)	C_a (kN)	C_{oa} (kN)
FLRBU1 (*): No other possible arrangement (1+1)		-	-	-
FLRBU2 (*): No other possible arrangement (1+1)		-	-	-
FLRBU3	53,3	95,7	24,7	31,9
FLRBU4	98,6	178,8	45,7	59,6
FLRBU5	145,3	282,6	67,3	94,2
FLRBU6	277,3	588,6	128,5	196,2
FLRBU7	405,5	923,1	187,9	307,7
FLRBU8	628,3	1684,6	291,2	561,5

Flanged thrust bearing units

SKF “FLRBU” flanged thrust bearing units can be fitted on the screw shafts in the table below:

Flange thrust bearing	Suitable for SRC & SRF	Suitable for PRU & PRK
FLRBU1	SR 8 x 4 - R4	PR 8 x 4 - R4 PR 12 x 5 - R5 PR 15 x 5 - R5 — PR 15 x 8 - R5
FLRBU2	SR 12 x 5 - R5 SR 15 x 5 - R5 — SR 15 x 8 - R5 SR 20 x 6 - R6	PR 20 x 6 - R6 PR 21 x 5 - R5 — PR 21 x 6 - R5 — PR 21 x 8 - R5 PR 24 x 6 - R6 — PR 24 x 12 - R6
FLRBU3	SR 24 x 6 - R6	PR 21 x 10 - R5 PR 25 x 5 - R5 — PR 25 x 10 - R5 — PR 25 x 15 - R5
FLRBU4	SR 21 x 5 - R5 — SR 21 x 6 - R5 — SR 21 x 8 - R5 SR 21 x 10 - R5 SR 24 x 12 - R6 SR 25 x 5 - R5 — SR 25 x 10 - R5 — SR 25 x 15 - R5	PR 30 x 5 - R5 — PR 30 x 6 - R5 — PR 30 x 10 - R5 PR 30 x 20 - R5 PR 36 x 6 - R6 — PR 36 x 9 - R6 — PR 36 x 12 - R6 PR 36 x 18 - R6 — PR 36 x 24 - R6 PR 39 x 5 - R5 PR 44 x 8 - R6 — PR 44 x 12 - R6
FLRBU5	SR 30 x 5 - R5 — SR 30 x 6 - R5 — SR 30 x 10 - R5 SR 30 x 20 - R5 SR 36 x 6 - R6 — SR 36 x 9 - R6 — SR 36 x 12 - R6 SR 36 x 18 - R6 — SR 36 x 24 - R6	PR 39 x 10 - R5 — PR 39 x 15 - R5 — PR 39 x 20 - R5 PR 39 x 25 - R5 PR 44 x 18 - R6 — PR 44 x 24 - R6 — PR 44 x 30 - R6 PR 48 x 5 - R5 — PR 48 x 8 - R5 PR 56 x 12 - R6
FLRBU6	SR 39 x 5 - R5 — SR 39 x 10 - R5 — SR 39 x 15 - R5 SR 39 x 20 - R5 — SR 39 x 25 - R5 SR 44 x 8 - R6 — SR 44 x 12 - R6 — SR 44 x 18 - R6 SR 44 x 24 - R6 — SR 44 x 30 - R6 SR 48 x 5 - R5 — SR 48 x 8 - R5 — SR 48 x 10 - R5 SR 56 x 12 - R6	PR 48 x 10 - R5 — PR 48 x 15 - R5 — PR 48 x 20 - R5 PR 48 x 25 - R5 PR 56 x 24 - R6 — PR 56 x 36 - R6 PR 60 x 10 - R5 — PR 60 x 15 - R5 — PR 60 x 20 - R5 PR 64 x 12 - R6 — PR 64 x 18 - R6 — PR 64 x 24 - R6 PR 64 x 30 - R6 — PR 64 x 36 - R6
FLRBU7	SR 48 x 15 - R5 — SR 48 x 20 - R5 — SR 48 x 25 - R5 SR 56 x 24 - R6 — SR 56 x 36 - R6 SR 64 x 12 - R6 — SR 64 x 18 - R6 — SR 64 x 24 - R6 SR 64 x 30 - R6 — SR 64 x 36 - R6	
FLRBU8	SR 60 x 10 - R5 — SR 60 x 15 - R5 — SR 60 x 20 - R5 SR 75 x 10 - R5 SR 80 x 12 - R6 — SR 80 x 18 - R6 — SR 80 x 24 - R6 SR 80 x 36 - R6 — SR 80 x 42 - R6	

Standard Range

The full range of “SV” recirculating roller screws

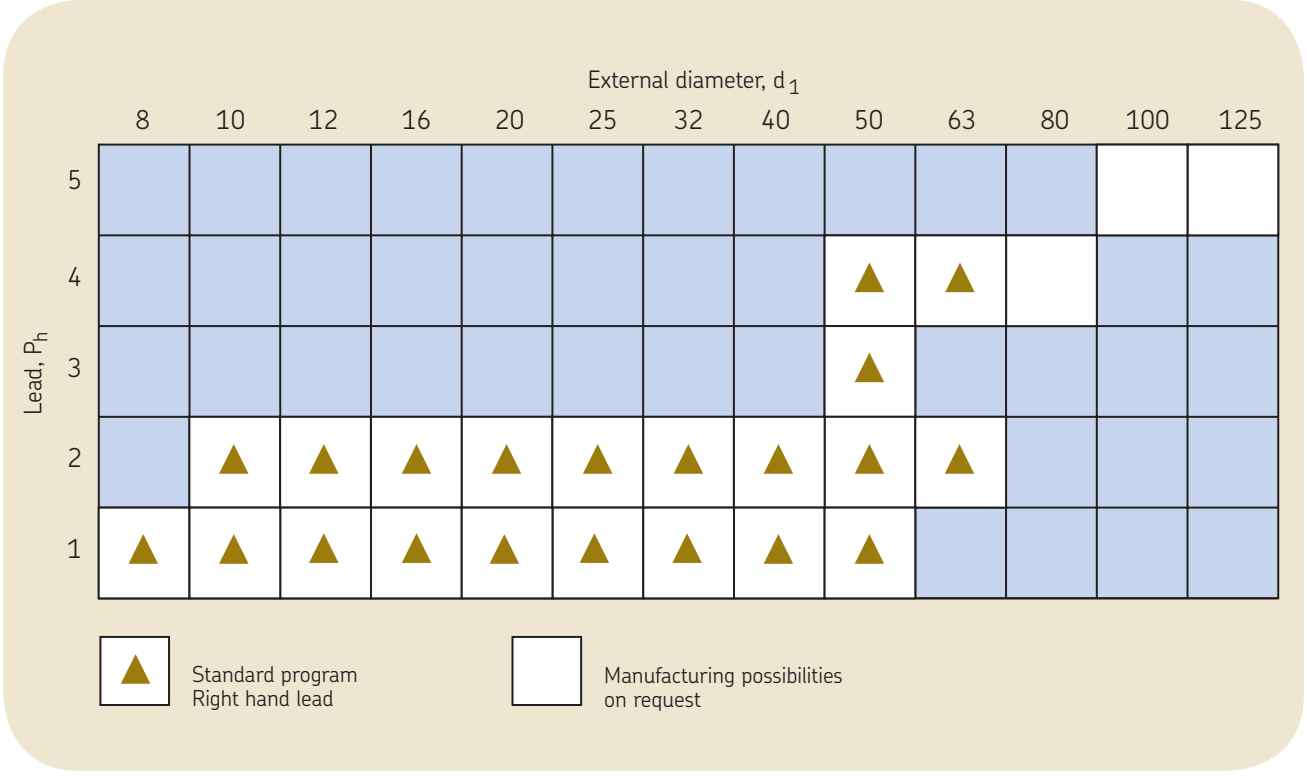

SKF recirculating roller screws

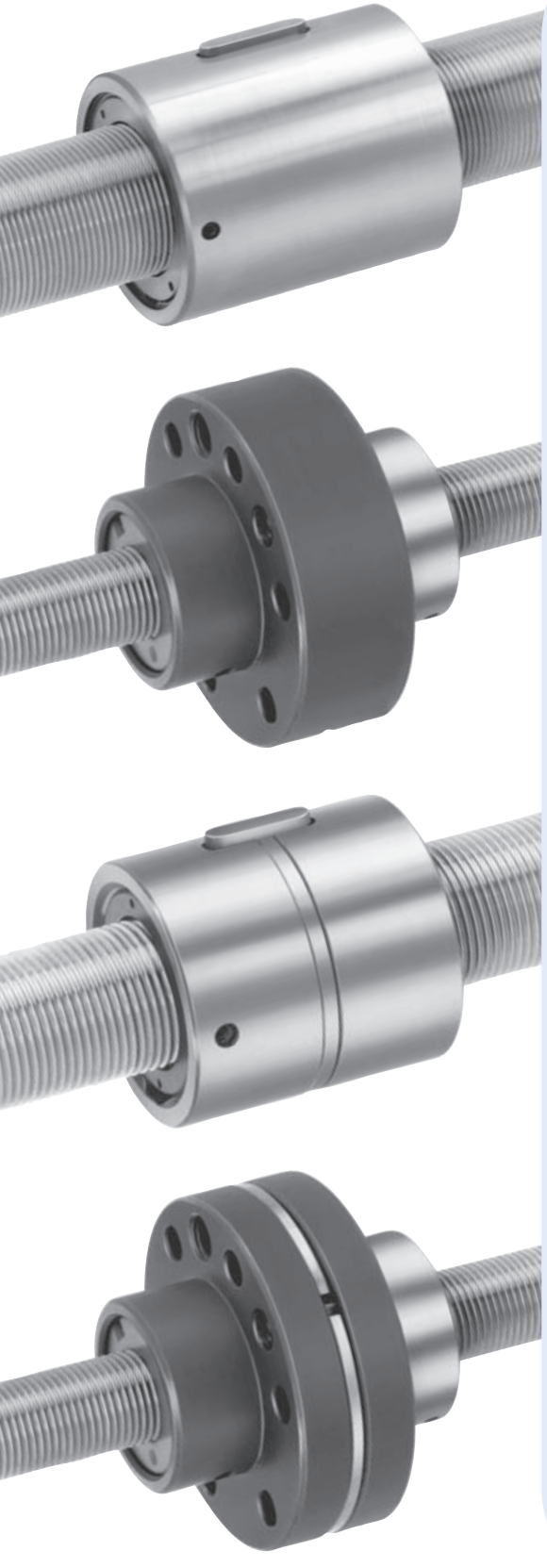

The fine screw for ultimate positioning accuracy has these advantages

- 1 mm lead on screws from 8 - 50 mm diameter
- Fine resolution
- Choice of 3 classes of lead precision
- Minimum input torque because of their great mechanical advantage
- Simplification of transmissions to improve their performance
- High load capacity
- Long life
- High rigidity and reliability (no miniaturised parts)
- Special surface treatments and lubrication available
- Cylindrical nuts with play or preloaded
- Flanged nuts with play or preloaded.

○ Backlash elimination with oversize rollers: as an option under following conditions:

▶ $\frac{\text{total length}}{d_1} \leq 30$

▶ $\frac{\text{threaded length}}{d_1} \leq 15$

5

Cylindrical nuts with axial play, SVC
Nuts with or without wiper recesses (standard = without)
Backlash elimination with oversize rollers ○ as an option (BVC)

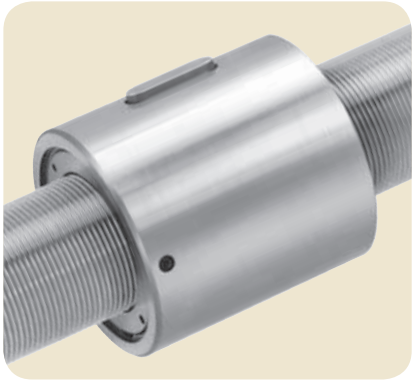

Standard

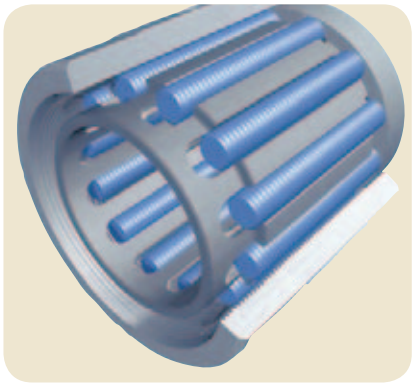

Grooved rollers

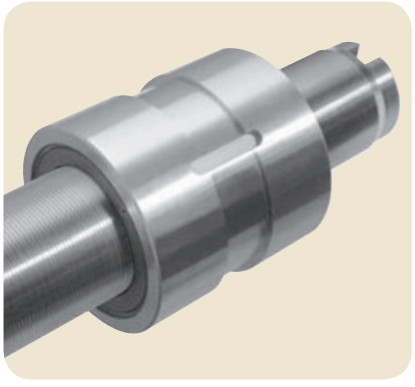

Customised

	d_1	P_h	N	l_{tp}	α	C_a	C_{oa}	S_{ap}	m_n	m_s	I_s	I_{nn}	I_{ns}	Z_n	Designation
	mm	mm	—	mm	°	kN	kN	mm	kg	kg/m	kgmm²/m	kgmm²	kgmm²	cm³	
○	**8**	**1**	1	500	2,28	8,4	11,0	0,02	0,1	0,36	2,6	3,6	0,1	0,72	**SVC 8x1**
○	**10**	**1**	1	650	1,82	8,9	11,4	0,02	0,1	0,57	6,7	5,0	0,1	0,95	**SVC 10x1**
○	**10**	**2**	2	650	3,64	8,9	11,4	0,02	0,1	0,57	6,7	5,0	0,1	0,95	**SVC 10x2**
○	**12**	**1**	1	750	1,52	10,3	14,0	0,02	0,1	0,84	14,2	6,7	0,1	1,08	**SVC 12x1**
○	**12**	**2**	2	750	3,04	10,3	14,0	0,02	0,1	0,84	14,2	6,7	0,1	1,08	**SVC 12x2**
○	**16**	**1**	1	1050	1,14	11,5	16,8	0,02	0,1	1,51	46,2	14,0	0,3	1,43	**SVC 16x1**
○	**16**	**2**	2	1050	2,28	11,5	16,8	0,02	0,1	1,51	46,2	14,0	0,3	1,43	**SVC 16x2**
○	**20**	**1**	1	1300	0,91	18,5	36,6	0,02	0,2	2,38	114,9	29,8	0,8	1,90	**SVC 20x1**
○	**20**	**2**	2	1300	1,82	18,5	36,6	0,02	0,2	2,38	114,9	29,8	0,8	1,90	**SVC 20x2**
○	**25**	**1**	1	1650	0,73	32,9	68,4	0,02	0,3	3,75	284,5	79,3	2,5	3,57	**SVC 25x1**
○	**25**	**2**	2	1650	1,46	32,9	68,4	0,02	0,3	3,75	284,5	79,3	2,5	3,57	**SVC 25x2**
○	**32**	**1**	1	2150	0,57	64,3	159,2	0,02	0,6	6,18	773,3	280,2	9,1	6,92	**SVC 32x1**
○	**32**	**2**	2	2150	1,14	64,3	159,2	0,02	0,6	6,18	773,3	280,2	9,1	6,92	**SVC 32x 2**
○	**40**	**1**	1	2700	0,46	79,1	231,6	0,02	1,2	9,69	190E1	878,7	18,8	9,57	**SVC 40x1**
○	**40**	**2**	1	2700	0,91	49,9	117,2	0,04	1,2	9,52	184E1	950,6	20,0	13,60	**SVC 40x2**
○	**50**	**1**	1	3500	0,36	189,8	544,3	0,02	2,0	14,98	455E1	219E1	76,0	24,90	**SVC 50x1**
○	**50**	**2**	1	3500	0,73	98,1	249,4	0,04	2,0	14,98	455E1	219E1	68,6	24,40	**SVC 50x2**
	50	**3**	2	3500	1,09	153,0	443,3	0,04	2,0	14,98	455E1	219E1	88,1	24,00	**SVC 50x3**
	50	**4**	2	3500	1,46	98,1	249,4	0,04	2,0	14,98	455E1	219E1	68,6	24,40	**SVC 50x4**
	63	**2**	1	4500	0,58	185,8	533,5	0,04	3,8	23,93	116E2	646E1	230,0	44,30	**SVC 63x2**
	63	**4**	2	4500	1,16	185,8	533,5	0,04	3,8	23,93	116E2	646E1	230,0	44,30	**SVC 63x4**
	80	**4**	1	6000	0,91	324,9	887,7	0,07	12,5	38,09	294E2	389E2	129E1	166,00	**SVC 80x4**
	100	**5**	1	8000	0,91	468,5	1376,3	0,07	22,8	59,51	718E2	108E3	400E1	308,00	**SVC 100x5**
	125	**5**	1	8000	0,73	756,0	2770	0,07	46,1	93,66	178E3	342E3	118E2	520,00	**SVC 125x5**

Designation: page 87 - Symbols: page 86

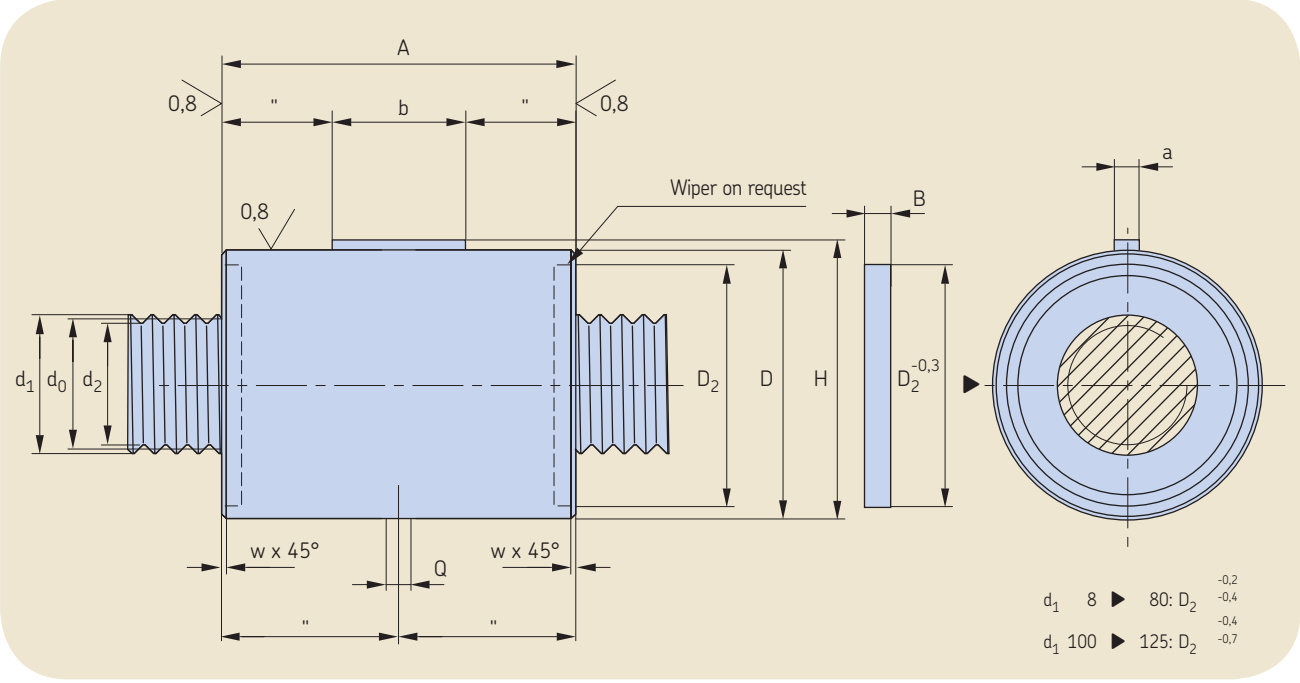

Designation	d_0	d_1	d_2	D g6/H7	A with wiper recess h12	A without wiper recess h12	B	w	a h9	b	H	Q	D_2
	mm	mm	mm	mm	mm	mm	mm	mm	mm	mm	mm	mm	mm
SVC 8x1	7,7	8	7,1	**20**	40	31	4	0,2	2	12	20,8	5	16,5
SVC 10x1	9,7	10	9,1	**22**	40	31	4	0,2	2	12	22,8	5	18,5
SVC 10x2	9,7	10	9,1	**22**	40	31	4	0,2	2	12	22,8	5	18,5
SVC 12x1	11,7	12	11,1	**24**	40	31	4	0,2	2	12	24,8	5	20,5
SVC 12x2	11,7	12	11,1	**24**	40	31	4	0,2	2	12	24,8	5	20,5
SVC 16x1	15,7	16	15,1	**29**	40	31	4	0,5	3	12	30,2	5	25,0
SVC 16x2	15,7	16	15,1	**29**	40	31	4	0,5	3	12	30,2	5	25,0
SVC 20x1	19,7	20	19,1	**34**	45	37	4	0,5	3	16	35,2	5	28,5
SVC 20x2	19,7	20	19,1	**34**	45	37	4	0,5	3	16	35,2	5	28,5
SVC 25x1	24,7	25	24,1	**42**	54	44	5	0,5	4	20	43,5	5	36,0
SVC 25x2	24,7	25	24,1	**42**	54	44	5	0,5	4	20	43,5	5	36,0
SVC 32x1	31,7	32	31,1	**54**	67	57	5	1,0	4	25	55,5	5	45,0
SVC 32x2	31,7	32	31,1	**54**	67	57	5	1,0	4	25	55,5	5	45,0
SVC 40x1	39,7	40	39,1	**68**	75	63	5	1,0	5	32	70,0	5	55,0
SVC 40x2	39,3	40	38,2	**68**	84	72	5	1,0	5	32	70,0	5	57,0
SVC 50x1	49,7	50	49,1	**82**	101	85	7	1,0	6	32	84,5	8	70,0
SVC 50x2	49,3	50	48,7	**82**	101	85	7	1,0	6	32	84,5	8	70,0
SVC 50x3	49,5	50	48,6	**82**	108	92	7	1,5	6	35	84,5	8	70,0
SVC 50x4	49,3	50	48,2	**82**	101	85	7	1,0	6	32	84,5	8	70,0
SVC 63x2	62,3	63	61,2	**103**	120	104	7	1,0	6	40	105,5	8	94,0
SVC 63x4	62,3	63	61,2	**103**	120	104	7	1,0	6	40	105,5	8	94,0
SVC 80x4	78,6	80	76,4	**141**	197	175	10	1,5	8	63	144,0	10	120,0
SVC 100x5	98,3	100	95,5	**175**	237	205	15	2,0	10	80	178,0	10	150,0
SVC 125x5	123,3	125	120,5	**220**	282	250	15	3,0	12	100	223,0	12	185,0

Flanged nuts with axial play, SVF
Backlash elimination with oversize rollers ○ as an option (BVF)

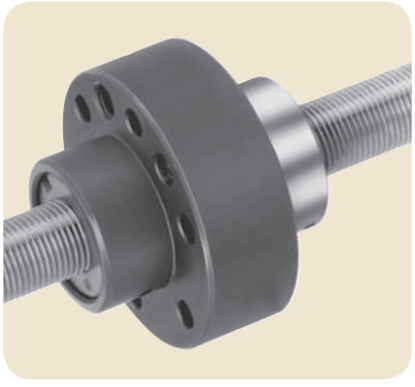

Standard

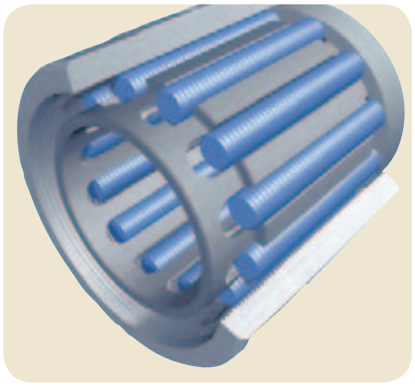

Grooved rollers

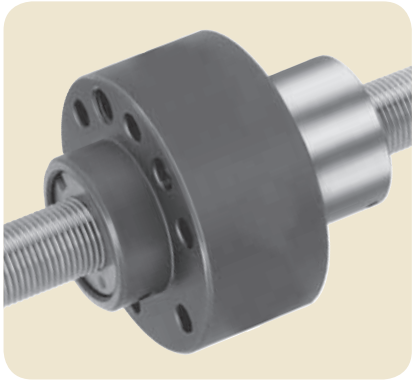

Customised

	d_1	P_h	N	l_{tp}	α	C_a	C_{oa}	S_{ap}	m_n	m_s	I_s	I_{nn}	I_{ns}	Z_n	Designation
	mm	mm	—	mm	°	kN	kN	mm	kg	kg/m	kgmm²/m	kgmm²	kgmm²	cm³	
○	**8**	**1**	1	500	2,28	8,4	11,0	0,02	0,2	0,36	2,6	47,9	0,1	0,72	**SVF 8x1**
○	**10**	**1**	1	650	1,82	8,9	11,4	0,02	0,2	0,57	6,7	47,0	0,1	0,95	**SVF 10x1**
○	**10**	**2**	2	650	3,64	8,9	11,4	0,02	0,2	0,57	6,7	47,0	0,1	0,95	**SVF 10x2**
○	**12**	**1**	1	750	1,52	10,3	14,0	0,02	0,2	0,84	14,2	63,5	0,1	1,08	**SVF 12x1**
○	**12**	**2**	2	750	3,04	10,3	14,0	0,02	0,2	0,84	14,2	63,5	0,1	1,08	**SVF 12x2**
○	**16**	**1**	1	1050	1,14	11,5	16,8	0,02	0,3	1,51	46,2	100,3	0,3	1,43	**SVF 16x1**
○	**16**	**2**	2	1050	2,28	11,5	16,8	0,02	0,3	1,51	46,2	100,3	0,3	1,43	**SVF 16x2**
○	**20**	**1**	1	1300	0,91	18,5	36,6	0,02	0,4	2,38	114,9	191,9	0,8	1,90	**SVF 20x1**
○	**20**	**2**	2	1300	1,82	18,5	36,6	0,02	0,4	2,38	114,9	191,9	0,8	1,90	**SVF 20x2**
○	**25**	**1**	1	1650	0,73	32,9	68,4	0,02	0,6	3,75	284,5	415,8	2,5	3,57	**SVF 25x1**
○	**25**	**2**	2	1650	1,46	32,9	68,4	0,02	0,6	3,75	284,5	415,8	2,5	3,57	**SVF 25x2**
○	**32**	**1**	1	2150	0,57	64,3	159,2	0,02	1,2	6,18	773,3	111E1	9,1	6,92	**SVF 32x1**
○	**32**	**2**	2	2150	1,14	64,3	159,2	0,02	1,2	6,18	773,3	111E1	9,1	6,92	**SVF 32x 2**
○	**40**	**1**	1	2700	0,46	79,1	231,6	0,02	2,1	9,69	190E1	312E1	18,8	9,57	**SVF 40x1**
○	**40**	**2**	1	2700	0,91	49,9	117,2	0,04	2,2	9,52	184E1	320E1	20,0	13,60	**SVF 40x2**
○	**50**	**1**	1	3500	0,36	189,8	544,3	0,02	3,7	14,98	455E1	819E1	76,0	24,90	**SVF 50x1**
○	**50**	**2**	1	3500	0,73	98,1	249,4	0,04	3,7	14,98	455E1	819E1	68,6	24,40	**SVF 50x2**
	50	**3**	2	3500	1,09	153,0	443,3	0,04	3,7	14,98	455E1	805E1	88,1	24,00	**SVF 50x3**
	50	**4**	2	3500	1,46	98,1	249,4	0,04	3,7	14,98	455E1	819E1	68,6	24,40	**SVF 50x4**
	63	**2**	1	4500	0,58	185,8	533,5	0,04	6,4	23,93	116E2	201E2	230,0	44,30	**SVF 63x2**
	63	**4**	2	4500	1,16	185,8	533,5	0,04	6,4	23,93	116E2	201E2	230,0	44,30	**SVF 63x4**
	80	**4**	1	6000	0,91	324,9	887,7	0,07	17,8	38,09	294E2	926E2	129E1	166,00	**SVF 80x4**
	100	**5**	1	8000	0,91	468,5	1376,3	0,07	33,1	59,51	718E2	256E3	400E1	308,00	**SVF 100x5**
	125	**5**	1	8000	0,73	756,0	2770	0,07	62,3	93,66	178E3	733E3	118E2	520,00	**SVF 125x5**

Designation: page 87 - Symbols: page 86

SKF

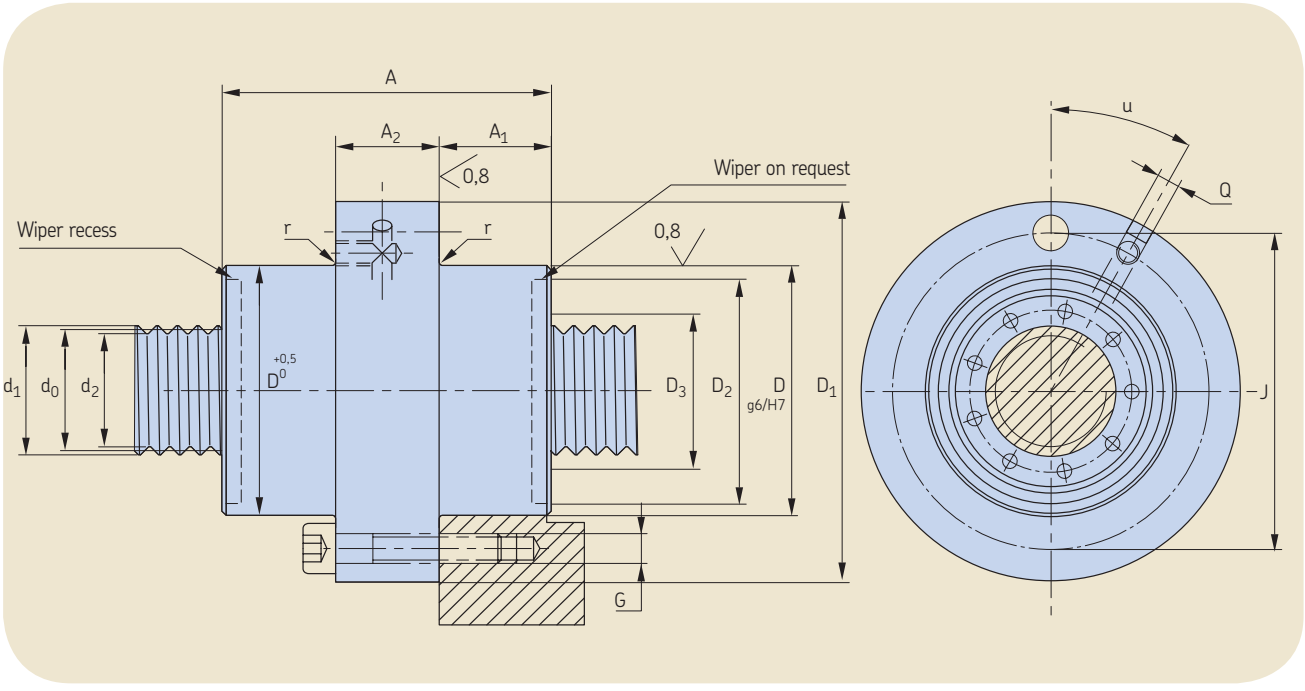

Designation	d_0	d_1	d_2	D	A h12	A_1	A_2	D_1	J js12	G	r +0,4	Q	u	D_2
	mm	mm	mm	mm	mm	mm	mm	mm	mm	mm	mm	mm	°	mm
SVF 8x1	7,7	8	7,1	**22**	40	12,0	16	43	33	6xM4	0,4	M6	30	16,5
SVF 10x1	9,7	10	9,1	**22**	40	12,0	16	43	33	6xM4	0,4	M6	30	18,5
SVF 10x2	9,7	10	9,1	**22**	40	12,0	16	43	33	6xM4	0,4	M6	30	18,5
SVF 12x1	11,7	12	11,1	**25**	40	12,0	16	46	36	6xM4	0,4	M6	30	20,5
SVF 12x2	11,7	12	11,1	**25**	40	12,0	16	46	36	6xM4	0,4	M6	30	20,5
SVF 16x1	15,7	16	15,1	**30**	40	12,0	16	51	41	6xM4	0,4	M6	30	25,0
SVF 16x2	15,7	16	15,1	**30**	40	12,0	16	51	41	6xM4	0,4	M6	30	25,0
SVF 20x1	19,7	20	19,1	**35**	45	13,5	18	58	46	6xM5	0,8	M6	30	28,5
SVF 20x2	19,7	20	19,1	**35**	45	13,5	18	58	46	6xM5	0,8	M6	30	28,5
SVF 25x1	24,7	25	24,1	**45**	54	18,0	18	68	56	6xM5	0,8	M6	30	36,0
SVF 25x2	24,7	25	24,1	**45**	54	18,0	18	68	56	6xM5	0,8	M6	30	36,0
SVF 32x1	31,7	32	31,1	**56**	67	23,5	20	84	70	6xM6	0,8	M6	30	45,0
SVF 32x2	31,7	32	31,1	**56**	67	23,5	20	84	70	6xM6	0,8	M6	30	45,0
SVF 40x1	39,7	40	39,1	**68**	75	24,0	27	102	85	6xM8	0,8	M6	30	55,0
SVF 40x2	39,3	40	38,2	**68**	84	28,5	27	102	85	6xM8	0,8	M6	30	57,0
SVF 50x1	49,7	50	49,1	**82**	101	34,0	33	124	102	6xM10	1,2	M6	30	70,0
SVF 50x2	49,3	50	48,7	**82**	101	34,0	33	124	102	6xM10	1,2	M6	30	70,0
SVF 50x3	49,5	50	48,6	**82**	108	37,5	33	124	102	6xM10	1,2	M6	30	70,0
SVF 50x4	49,3	50	48,2	**82**	101	34,0	33	124	102	6xM10	1,2	M6	30	70,0
SVF 63x2	62,3	63	61,2	**105**	120	43,5	33	150	127	6xM12	1,2	M8x1	30	94,0
SVF 63x4	62,3	63	61,2	**105**	120	43,5	33	150	127	6xM12	1,2	M8x1	30	94,0
SVF 80x4	78,6	80	76,4	**140**	197	76,0	45	200	170	8xM16	1,6	M8x1	22°30	120,0
SVF 100x5	98,3	100	95,5	**180**	237	93,5	50	240	210	12xM16	2,4	M8x1	15	150,0
SVF 125x5	123,3	125	120,5	**220**	282	113,5	55	310	270	12xM18	2,4	M8x1	15	185,0

Preloaded cylindrical nuts, PVU
Nuts with or without wiper recesses (standard = without)

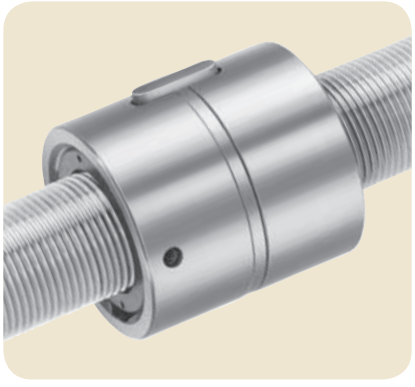

Standard

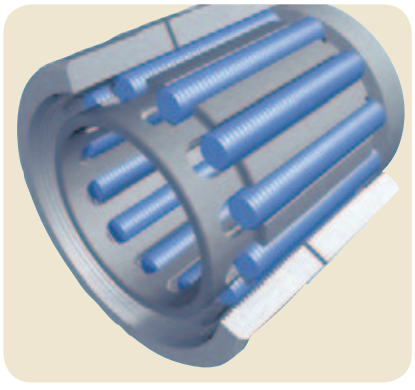

Grooved rollers



Customised

d_1	P_h	N	l_{tp}	α	C_a	C_{oa}	R_{ng}	R_{nr}	T_{pr}	F_{pr}	m_n	m_s	I_s	I_{nn}	I_{ns}	Z_n
mm	mm	—	mm	°	kN	kN	N/µm	N/µm	Nm	N	kg	kg/m	kgmm²/m	kgmm²	kgmm²	cm³
8	**1**	1	400	2,28	4,8	5,5	140	190	0,02 - 0,08	770	0,1	0,36	2,6	3,6	0,1	0,72
10	**1**	1	500	1,82	5,1	5,7	138	185	0,03 - 0,10	820	0,1	0,57	6,7	5,0	0,1	0,95
10	**2**	2	500	3,64	5,1	5,7	138	185	0,03 - 0,10	820	0,1	0,57	6,7	5,0	0,1	0,95
12	**1**	1	600	1,52	5,9	7,0	159	215	0,05 - 0,15	940	0,1	0,84	14,2	6,7	0,1	1,08
12	**2**	2	600	3,04	5,9	7,0	159	215	0,05 - 0,15	940	0,1	0,84	14,2	6,7	0,1	1,08
16	**1**	1	825	1,14	6,6	8,4	182	245	0,10 - 0,20	1060	0,1	1,51	46,2	14,0	0,3	1,43
16	**2**	2	825	2,28	6,6	8,4	182	245	0,10 - 0,20	1060	0,1	1,51	46,2	14,0	0,3	1,43
20	**1**	1	1050	0,91	10,6	18,3	362	490	0,18 - 0,32	1430	0,2	2,38	114,9	29,8	0,8	1,90
20	**2**	2	1050	1,82	10,6	18,3	362	490	0,20 - 0,35	1430	0,2	2,38	114,9	29,8	0,8	1,90
25	**1**	1	1300	0,73	18,9	34,2	469	635	0,35 - 0,65	2270	0,3	3,75	284,5	79,3	2,5	3,57
25	**2**	2	1300	1,46	18,9	34,2	469	635	0,40 - 0,70	2270	0,3	3,75	284,5	79,3	2,5	3,57
32	**1**	1	1700	0,57	36,9	79,6	736	995	0,50 - 0,95	2510	0,6	6,18	773,3	280,2	9,1	6,92
32	**2**	2	1700	1,14	36,9	79,6	721	975	0,50 - 0,95	2320	0,6	6,18	773,3	280,2	9,1	6,92
40	**1**	1	2150	0,46	45,4	115,8	1034	1395	0,70 - 1,40	2840	1,2	9,69	190E1	878,7	18,8	9,57
40	**2**	1	2150	0,91	28,7	58,6	618	835	0,70 - 1,40	2710	1,2	9,52	184E1	950,6	20,0	13,6
50	**1**	1	2800	0,36	109,0	272,2	1100	1430	1,20 - 2,50	3900	2,0	14,98	455E1	219E1	76,0	24,40
50	**2**	1	2800	0,73	56,3	124,7	803	1045	1,20 - 2,50	3660	2,0	14,98	455E1	219E1	68,6	24,40
50	**3**	2	2800	1,09	88,0	221,7	1000	1300	1,20 - 2,50	3600	2,0	14,98	455E1	219E1	81,1	24,40
50	**4**	2	2800	1,46	56,3	124,7	803	1045	1,20 - 2,50	3660	2,0	14,98	455E1	219E1	68,6	24,40
63	**2**	1	3600	0,58	106,7	266,8	1177	1530	1,80 - 3,20	4540	3,8	23,93	116E2	646E1	230,0	44,30
63	**4**	2	3600	1,16	106,7	266,8	1177	1530	2,00 - 3,50	4540	3,8	23,93	116E2	646E1	230,0	44,30
80	**4**	1	4000	0,91	186,6	443,9	1280	1665	3,00 - 5,50	5410	12,5	38,09	294E2	389E2	129E1	166,00
100	**5**	1	4000	0,91	269,1	688,2	1323	1720	4,50 - 7,50	5920	22,8	59,51	718E2	108E3	400E1	308,00
125	**5**	1	4000	0,73	434,0	1385,0	2027	2635	7,00 -10,00	6510	46,1	93,66	179E3	342E3	118E2	520,00

Designation: page 87 - Symbols: page 86

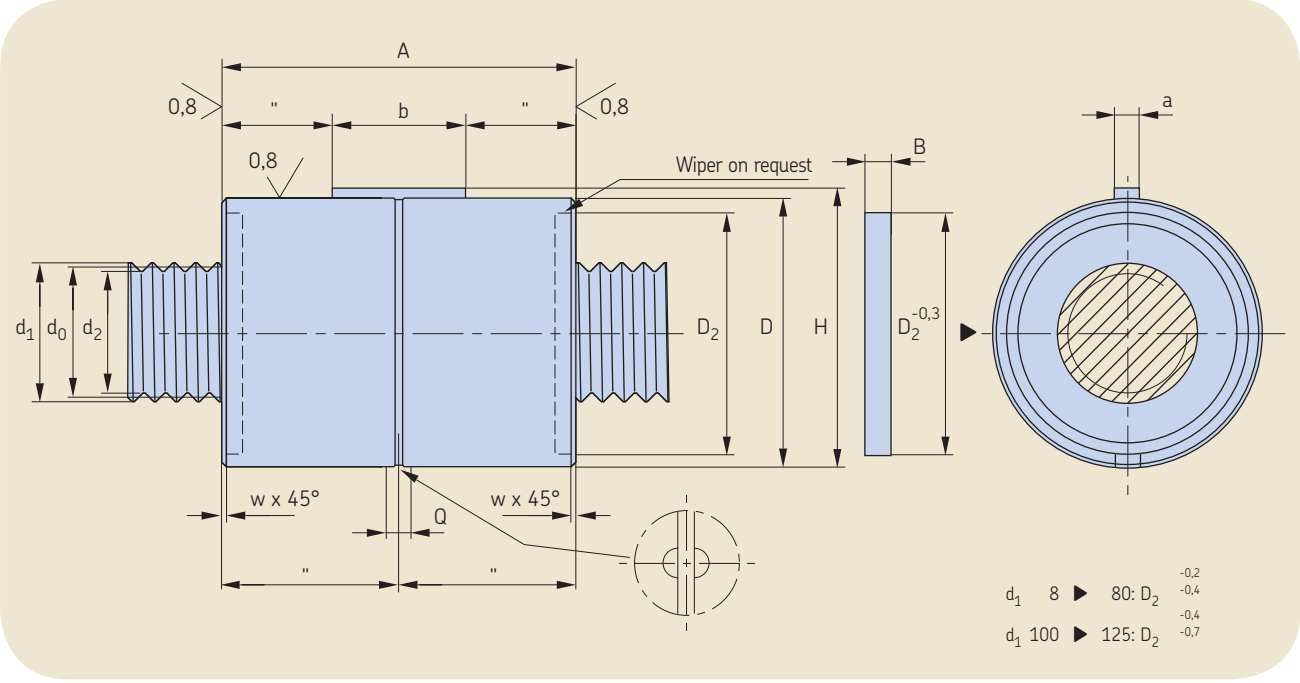

Designation	d_0	d_1	d_2	D g6/H7	A with wiper recess h12	A without wiper recess h12	B	w	a h9	b	H	Q	D_2
	mm	mm	mm	mm	mm	mm	mm	mm	mm	mm	mm	mm	mm
PVU 8x1	7,7	8	7,1	**20**	40	31	4	0,2	2	12	20,8	5	16,5
PVU 10x1	9,7	10	9,1	**22**	40	31	4	0,2	2	12	22,8	5	18,5
PVU 10x2	9,7	10	9,1	**22**	40	31	4	0,2	2	12	22,8	5	18,5
PVU 12x1	11,7	12	11,1	**24**	40	31	4	0,2	2	12	24,8	5	20,5
PVU 12x2	11,7	12	11,1	**24**	40	31	4	0,2	2	12	24,8	5	20,5
PVU 16x1	15,7	16	15,1	**29**	40	31	4	0,5	3	12	30,2	5	25,0
PVU 16x2	15,7	16	15,1	**29**	40	31	4	0,5	3	12	30,2	5	25,0
PVU 20x1	19,7	20	19,1	**34**	45	37	4	0,5	3	16	35,2	5	28,5
PVU 20x2	19,7	20	19,1	**34**	45	37	4	0,5	3	16	35,2	5	28,5
PVU 25x1	24,7	25	24,1	**42**	54	44	5	0,5	4	20	43,5	5	36,0
PVU 25x2	24,7	25	24,1	**42**	54	44	5	0,5	4	20	43,5	5	36,0
PVU 32x1	31,7	32	31,1	**54**	67	57	5	1,0	4	25	55,5	5	45,0
PVU 32x2	31,7	32	31,1	**54**	67	57	5	1,0	4	25	55,5	5	45,0
PVU 40x1	39,7	40	39,1	**68**	75	63	5	1,0	5	32	70,0	5	55,0
PVU 40x2	39,3	40	38,2	**68**	84	72	5	1,0	5	32	70,0	5	57,0
PVU 50x1	49,7	50	49,1	**82**	101	85	7	1,0	6	32	84,5	8	70,0
PVU 50x2	49,3	50	48,7	**82**	101	85	7	1,0	6	32	84,5	8	70,0
PVU 50x3	49,5	50	48,6	**82**	108	92	7	1,5	6	35	84,5	8	70,0
PVU 50x4	49,3	50	48,2	**82**	101	85	7	1,0	6	32	84,5	8	70,0
PVU 63x2	62,3	63	61,2	**103**	120	104	7	1,0	6	40	105,5	8	94,0
PVU 63x4	62,3	63	61,2	**103**	120	104	7	1,0	6	40	105,5	8	94,0
PVU 80x4	78,6	80	76,4	**141**	197	175	10	1,5	8	63	144,0	10	120,0
PVU 100x5	98,3	100	95,5	**175**	237	205	15	2,0	10	80	178,0	10	150,0
PVU 125x5	123,3	125	120,5	**220**	282	250	15	3,0	12	100	223,0	12	185,0

Preloaded flanged nuts, PVK
Nuts with wiper recesses

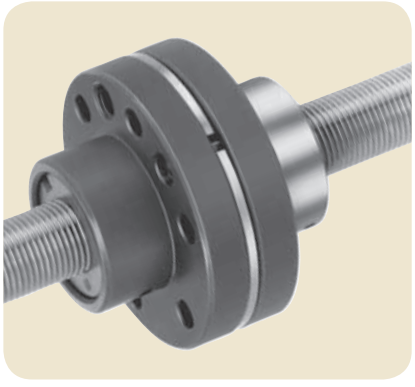

Standard

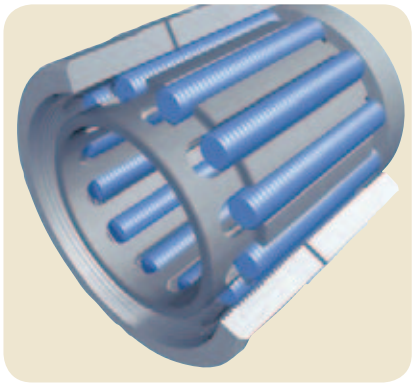

Grooved rollers

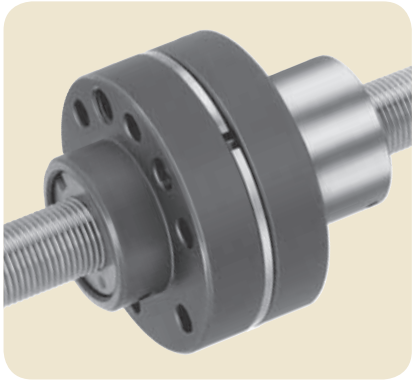

Customised

d_1	P_h	N	l_{tp}	α	C_a	C_{oa}	R_{ng}	R_{nr}	T_{pr}	F_{pr}	m_n	m_s	I_s	I_{nn}	I_{ns}	Z_n
mm	mm	—	mm	°	kN	kN	N/µm	N/µm	Nm	N	kg	kg/m	kgmm²/m	kgmm²	kgmm²	cm³
8	**1**	1	400	2,28	4,8	5,5	190	255	0,02 - 0,08	770	0,2	0,36	2,6	47,9	0,1	0,72
10	**1**	1	500	1,82	5,1	5,7	185	250	0,03 - 0,10	820	0,2	0,57	6,7	47,0	0,1	0,95
10	**2**	2	500	3,64	5,1	5,7	185	250	0,03 - 0,10	820	0,2	0,57	6,7	47,0	0,1	0,95
12	**1**	1	600	1,52	5,9	7,0	215	290	0,05 - 0,15	940	0,2	0,84	14,2	63,5	0,1	1,08
12	**2**	2	600	3,04	5,9	7,0	215	290	0,05 - 0,15	940	0,2	0,84	14,2	63,5	0,1	1,08
16	**1**	1	825	1,14	6,6	8,4	245	330	0,10 - 0,20	1060	0,3	1,51	46,2	100,3	0,3	1,43
16	**2**	2	825	2,28	6,6	8,4	245	330	0,10 - 0,20	1060	0,3	1,51	46,2	100,3	0,3	1,43
20	**1**	1	1050	0,91	10,6	18,3	490	660	0,18 - 0,32	1430	0,4	2,38	114,9	191,9	0,8	1,90
20	**2**	2	1050	1,82	10,6	18,3	490	660	0,20 - 0,35	1430	0,4	2,38	114,9	191,9	0,8	1,90
25	**1**	1	1300	0,73	18,9	34,2	635	855	0,35 - 0,65	2270	0,6	3,75	284,5	415,8	2,5	3,57
25	**2**	2	1300	1,46	18,9	34,2	635	855	0,40 - 0,70	2270	0,6	3,75	284,5	415,8	2,5	3,57
32	**1**	1	1700	0,57	36,9	79,6	995	1345	0,50 - 0,95	2510	1,2	6,18	773,3	111E1	9,1	6,92
32	**2**	2	1700	1,14	36,9	79,6	975	1315	0,50 - 0,95	2320	1,2	6,18	773,3	111E1	9,1	6,92
40	**1**	1	2150	0,46	45,4	115,8	1395	1885	0,70 - 1,40	2840	2,1	9,69	190E1	312E1	18,8	9,57
40	**2**	1	2150	0,91	28,7	58,6	835	1125	0,70 - 1,40	2710	2,2	9,52	184E1	320E1	20,0	13,6
50	**1**	1	2800	0,36	109,0	272,2	1430	1930	1,20 - 2,50	3900	3,7	14,98	455E1	819E1	76,0	24,40
50	**2**	1	2800	0,73	56,3	124,7	1045	1410	1,20 - 2,50	3660	3,7	14,98	455E1	819E1	68,6	24,40
50	**3**	2	2800	1,09	88,0	221,7	1300	1755	1,20 - 2,50	3600	3,7	14,98	455E1	805E1	81,1	24,40
50	**4**	2	2800	1,46	56,3	124,7	1045	1410	1,20 - 2,50	3660	3,7	14,98	455E1	819E1	68,6	24,40
63	**2**	1	3600	0,58	106,7	266,8	1530	2065	1,80 - 3,20	4540	6,4	23,93	116E2	201E2	230,0	44,30
63	**4**	2	3600	1,16	106,7	266,8	1530	2065	2,00 - 3,50	4540	6,4	23,93	116E2	201E2	230,0	44,30
80	**4**	1	4000	0,91	186,6	443,9	1665	2250	3,00 - 5,50	5410	17,8	38,09	294E2	926E2	129E1	166,00
100	**5**	1	4000	0,91	269,1	688,2	1720	2320	4,50 - 7,50	5920	33,1	59,51	718E2	256E3	400E1	308,00
125	**5**	1	4000	0,73	434,0	1385,0	2635	3555	7,00 -10,00	6510	62,3	93,66	179E3	733E3	118E2	520,00

Designation: page 87 - Symbols: page 86

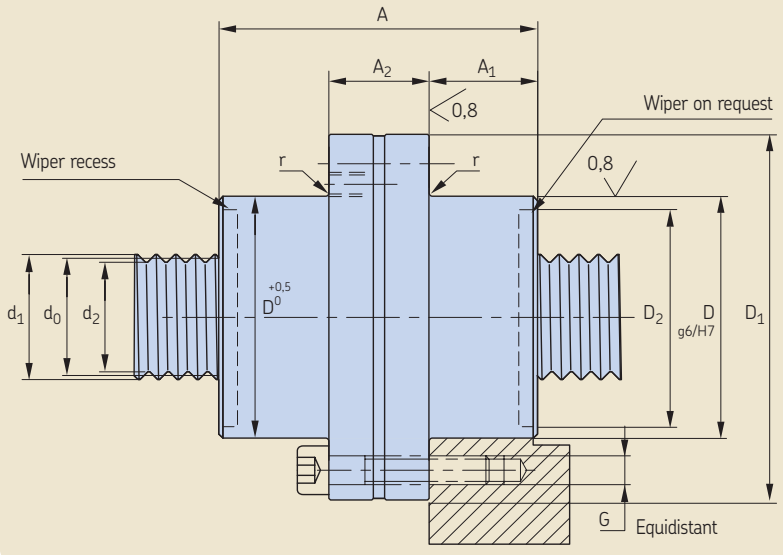

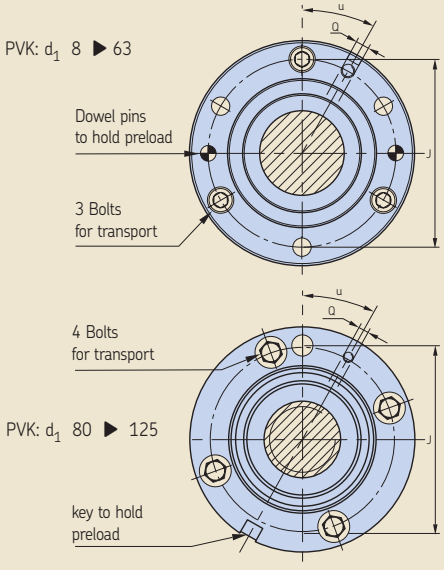

Designation	d_0	d_1	d_2	D	A h12	A_1	A_2	D_1	J js12	G	r +0,4	Q	u	D_2
	mm	mm	mm	mm	mm	mm	mm	mm	mm	mm	mm	mm	°	mm
PVK 8x1	7,7	8	7,1	**22**	40	12,0	16	43	33	6xM4	0,4	M6	30	16,5
PVK 10x1	9,7	10	9,1	**22**	40	12,0	16	43	33	6xM4	0,4	M6	30	18,5
PVK 10x2	9,7	10	9,1	**22**	40	12,0	16	43	33	6xM4	0,4	M6	30	18,5
PVK 12x1	11,7	12	11,1	**25**	40	12,0	16	46	36	6xM4	0,4	M6	30	20,5
PVK 12x2	11,7	12	11,1	**25**	40	12,0	16	46	36	6xM4	0,4	M6	30	20,5
PVK 16x1	15,7	16	15,1	**30**	40	12,0	16	51	41	6xM4	0,4	M6	30	25,0
PVK 16x2	15,7	16	15,1	**30**	40	12,0	16	51	41	6xM4	0,4	M6	30	25,0
PVK 20x1	19,7	20	19,1	**35**	45	13,5	18	58	46	6xM5	0,8	M6	30	28,5
PVK 20x2	19,7	20	19,1	**35**	45	13,5	18	58	46	6xM5	0,8	M6	30	28,5
PVK 25x1	24,7	25	24,1	**45**	54	18,0	18	68	56	6xM5	0,8	M6	30	36,0
PVK 25x2	24,7	25	24,1	**45**	54	18,0	18	68	56	6xM5	0,8	M6	30	36,0
PVK 32x1	31,7	32	31,1	**56**	67	23,5	20	84	70	6xM6	0,8	M6	30	45,0
PVK 32x2	31,7	32	31,1	**56**	67	23,5	20	84	70	6xM6	0,8	M6	30	45,0
PVK 40x1	39,7	40	39,1	**68**	75	24,0	27	102	85	6xM8	0,8	M6	30	55,0
PVK 40x2	39,3	40	38,2	**68**	84	28,5	27	102	85	6xM8	0,8	M6	30	57,0
PVK 50x1	49,7	50	49,1	**82**	101	34,0	33	124	102	6xM10	1,2	M6	30	70,0
PVK 50x2	49,3	50	48,7	**82**	101	34,0	33	124	102	6xM10	1,2	M6	30	70,0
PVK 50x3	49,5	50	48,6	**82**	108	37,5	33	124	102	6xM10	1,2	M6	30	70,0
PVK 50x4	49,3	50	48,2	**82**	101	34,0	33	124	102	6xM10	1,2	M6	30	70,0
PVK 63x2	62,3	63	61,2	**105**	120	43,5	33	150	127	6xM12	1,2	M8x1	30	94,0
PVK 63x4	62,3	63	61,2	**105**	120	43,5	33	150	127	6xM12	1,2	M8x1	30	94,0
PVK 80x4	78,6	80	76,4	**140**	197	76,0	45	200	170	8xM16	1,6	M8x1	22°30	120,0
PVK 100x5	98,3	100	95,5	**180**	237	93,5	50	240	210	12xM16	2,4	M8x1	15	150,0
PVK 125x5	123,3	125	120,5	**220**	282	113,5	55	310	270	12xM18	2,4	M8x1	15	185,0

Flanged thrust bearing units

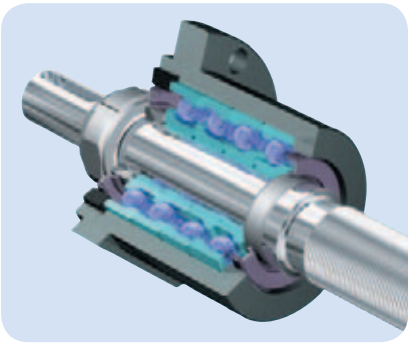

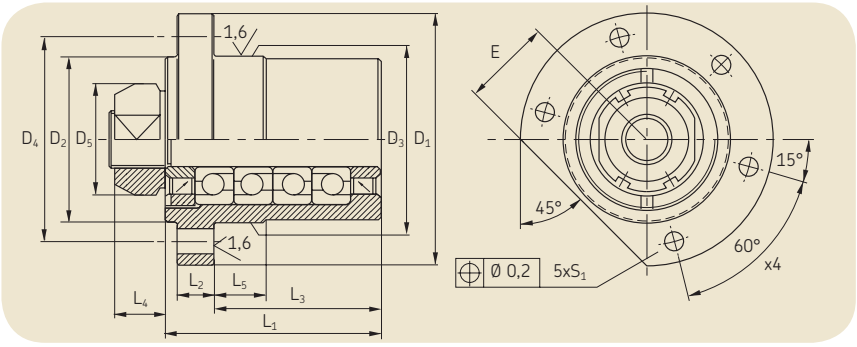

In standard version, the “FLRBU” thrust bearing unit is assembled according to drawing page 30 or 31. If you require a different assembly, please indicate it when ordering. Greased for life with SKF LGEP2.

	Angular contact ball bearing (40°)							Lock nut				
	Basic load rating (axial)		Number of bearings	Bearings designation	Maximum preload torque *	Axial rigidity	Tilt rigidity	High precision KMT nut				
Flanged bearing unit designation	C_a	C_{oa}						Designation	Hook spanner	Tightening torque (Nm)	Grub screws Size	Max. tightening torque (Nm)
	kN	kN			Nm	N/µm	Nm/mrad			Nm		
FLRBU1	13,3	14,7	2	7201 BEGBP	0.10	150	40	KMT 1	HN 3	10	M5	4,5
FLRBU2	27.9	31.9	2	7303 BEGBP	0.25	190	51	KMT 3	HN 4	15	M6	8
FLRBU3	40.1	63.8	4	7204 BEGBP	0.25	400	140	KMT 4	HN 5	18	M6	8
FLRBU4	74.2	119.2	4	7305 BEGBP	1.10	450	160	KMT 5	HN 5	25	M6	8
FLRBU5	109.4	188.4	4	7307 BEGBP	1.10	600	715	KMT 7	HN 7	42	M6	8
FLRBU6	208.8	392.3	4	7310 BEGBP	1.50	750	1000	KMT 10	HN 10	70	M8	18
FLRBU7	305,3	615,4	4	7313 BEGBP	2.00	1250	3200	KMT 13	HN 14	100	M8	18
FLRBU8	473,1	1123	4	7318 BEGBP	2.30	1500	7500	KMT 18	HN 18	160	M10	35

Dimensions (mm)													
Flanged bearing unit designation	L_1	L_2	L_3	L_4	D1	D2	D3 h7	D4	D5	S_1 H13	Fixing screws	E	L_5
FLRBU1	42	10	25.0	14	76	50	47	63	30	6.6	M6 × 25	27	12,0
FLRBU2	46	10	32.0	18	90	62	60	76	37	6.6	M6 × 25	32	18,0
FLRBU3	77	13	60.0	18	90	59	60	74	40	9.0	M8 × 25	32	30,0
FLRBU4	89	16	68.0	20	120	80	80	100	44	11.0	M10 × 30	44	36,0
FLRBU5	110	20	82.0	22	140	99	100	120	54	13.0	M12 × 40	54	47,0
FLRBU6	140	25	98.5	25	171	130	130	152	75	13.0	M12 × 40	67	58,5
FLRBU7	180	30	133.5	28	225	170	170	198	95	17.5	M16 × 55	87	53,5
FLRBU8	235	35	174.0	32	285	219	219	252	125	22.0	M20	115	99,0

* Preload torque measured at 50 rpm with SKF LGEP2 as lubricant.

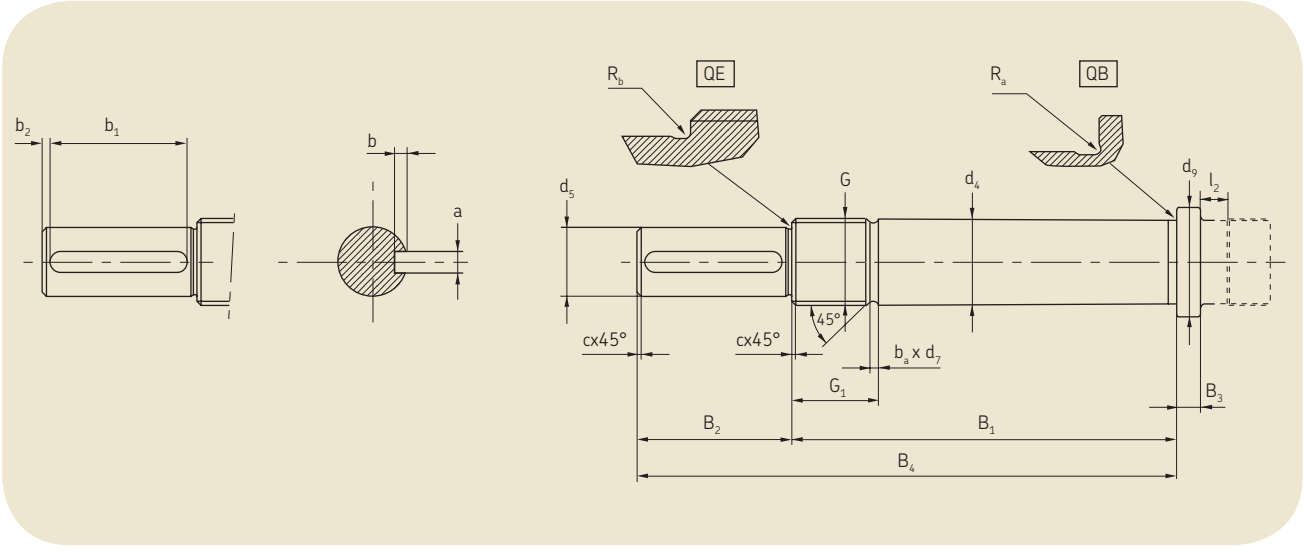

Dimensions (mm)																		
Thrust bearing units	d_4 h6	d_5 h7	d_9	B_1 js12	B_2	B_4 js12	B_3	G 6g	G_1	c	b_a	d_7 h11	R_a	R_b	a N9	b +0.100 0	b_1 +0.5 0	b_2
FLRBU1	12	10	17	58	20	78	5	M12 × 1	17	0.5	1.5	10.5	0.4	0.4	3	1.8	16	1.5
FLRBU2	17	15	23	66	30	96	5	M17 × 1	22	0.5	1.5	15.5	0.6	0.6	5	3.0	25	2.0
FLRBU3	20	17	27	97	40	137	7	M20 × 1	22	0.5	1.5	18.5	0.6	0.6	5	3.0	35	2.0
FLRBU4	25	20	34	112	45	157	7	M25 × 1.5	25	0.5	2.3	22.8	0.6	0.6	6	3.5	40	2.5
FLRBU5	35	30	45	134	55	189	10	M35 × 1.5	26	1	2.3	32.8	0.6	0.6	8	4.0	45	2.5
FLRBU6	50	40	62	168	65	233	12	M50 × 1.5	31	1	2.3	47.8	0.8	0.8	12	5.0	55	4.0
FLRBU7	65	60	78	210	100	310	18	M65 × 2	32	1	3.0	62.2	1.2	1.0	18	7.0	90	2.5
FLRBU8	90	85	108	270	120	390	25	M90 × 2	39	1	3.0	87.2	1.6	1.2	25	9.0	100	5.0

Undercut l_2 is defined p20.
d_9 can be equal to the root diameter for some sizes.

Other possible bearing arrangement

In case of load acting mainly in one direction, we recommend following thrust bearings.

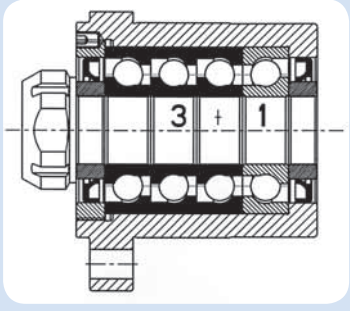

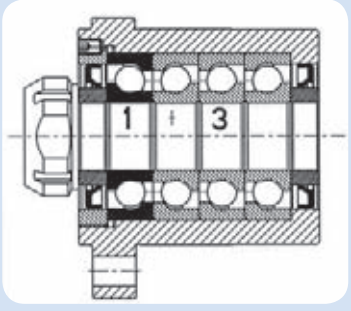

	C_a (kN)	C_{oa} (kN)	C_a (kN)	C_{oa} (kN)
FLRBU1 (*): No other possible arrangement (1+1)		-	-	-
FLRBU2 (*): No other possible arrangement (1+1)		-	-	-
FLRBU3	53,3	95,7	24,7	31,9
FLRBU4	98,6	178,8	45,7	59,6
FLRBU5	145,3	282,6	67,3	94,2
FLRBU6	277,3	588,6	128,5	196,2
FLRBU7	405,5	923,1	187,9	307,7
FLRBU8	628,3	1684,6	291,2	561,5

Flanged thrust bearing units

SKF “FLRBU” flanged thrust bearing units can be fitted on the screw shafts in the table below:

Flange thrust bearing	Suitable for SVC	Suitable for PVU & PVK
FLRBU1	SV 8 x 1 - R1 SV 10 x 1 - R1 – SV 10 x 2 - R2 SV 12 x 1 - R1 – SV 12 x 2 - R2 SV 16 x 1 - R1 – SV 16 x 2 - R2	PV 8 x 1 - R1 – PV 10 x 1 - R1 – PV 10 x 2 - R2 PV 12 x 1 - R1 – PV 16 x 1 - R1 PV 16 x 2 - R2 – PV 20 x 1 - R1
FLRBU2	SV 20 x 1 - R1 – SV 20 x 2 - R2	PV 25 x 1 - R1 – PV 25 x 2 - R2
FLRBU3	SV 25 x 1 - R1 – SV 25 x 2 - R2	PV 32 x 1 - R1 – PV 32 x 2 - R2 PV 40 x 2 - R1
FLRBU4	SV 32 x 1 - R1 – SV 32 x 2 - R2 SV 40 x 2 - R1	PV 40 x 1 - R1 PV 50 x 2 - R1 – PV 50 x 4 - R2
FLRBU5	SV 40 x 1 - R1 SV 50 x 2 - R1 – SV 50 x 4 - R2	PV 50 x 1 - R1 – PV 50 x 3 - R2 PV 63 x 2 - R1 – PV 63 x 4 - R2
FLRBU6	SV 50 x 1 - R1 – SV 50 x 3 - R2 SV 63 x 2 - R1 – SV 63 x 4 - R2	PV 80 x 4 - R1
FLRBU7	SV 80 x 4 - R1	PV 100 x 5 - R1
FLRBU8	SV 100 x 5 - R1	

Ultra Power range

The SKF Ultra Power range is designed for heavy loads and long life.



High load capacities

SKF Ultra Power range of Planetary Roller Screws has been optimised to provide the maximum possible life within a compact space envelope.

This has resulted in an increase in capacity of up to 60 % over the standard product. Load capacity is independent of lead.

To attain L_{10} life performance a mean working load of up to 80 % of C_a is allowed (50 % for HRP/HRC 60).

Designation
HRC: cylindrical nut
HRP: nut with non-central flange
HRF: nut with central flange

The maximum load should not be applied on the mounting bolts but on the flange.

For each screw assembly size, you find in the table page 78 two different values for the dynamic load capacity (C_a) according to the maximum load applied:
- the C_a capacity in black is valid for max. efforts up to 80 % of the table value (diameter 60 excepted, which is 50 % of the value)
- the C_a capacitiy in blue -higher- is valid for max. efforts ≤ F_a

Example:

HRP 120 x 20
- heavy press application
  - F_{max} = 600 kN
  - C_a = 1192 kN

- plastic injection application
  - F_{max} = 300 kN
  - C_a = 1550 kN

Short strokes/oscillation performance

The kinematics of all SKF Planetary Roller Screws provides continuous rolling of the working elements without recirculation. This means they are highly reliable in high load applications where there are short strokes and rapid and or many changes of direction.

Axial play

Assemblies are available with an axial play less than 0,07 mm (0,1 for a 40 mm lead). Preload is not available.

Lead precision

Standard lead precision is G5.

Speed - Environment

All SKF Planetary Roller Screws are rated to a maximum $N \times d_0$ value of 160.000. Their rollers are further controlled by planetary gears which help maintain rolling under extreme condition of speed and/or contamination. The rolling performance provides low noise operation. For maximum speed under heavy load, please contact SKF for advice.

Wipers

Standard version includes wipers (WPR in the designation). Screws can be delivered without wipers on request (NOWPR).

Lubrication

Because of the heavy loads and high duty, special care must be made in the choice of lubricant.
Please contact SKF for advice.

Applications

The “Ultra Power Range” offers the power of hydraulic actuators combined with the precision and flexibility of electric control, for example:

- injection molding machines for plastic and rubber
- presses
- broaching machines
- the steel industry including casting & rolling
- friction welding
- hydro-electric plants
- actuators.

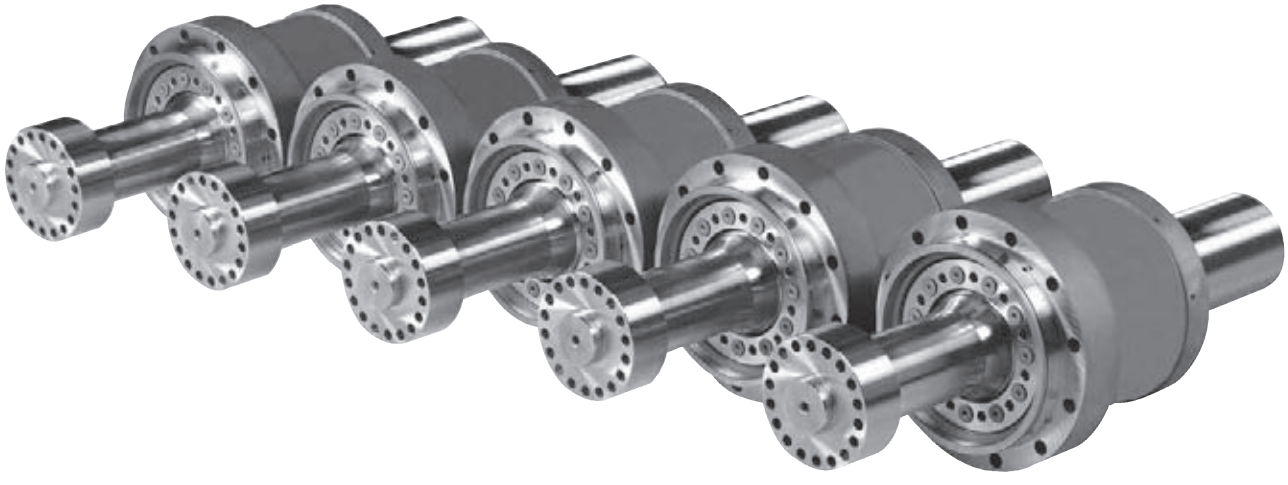

Designation	d_0	P_h					
		15	20	25	30	35	40
	mm	mm	mm	mm	mm	mm	mm
HRP/HRC/HRF60	60,0	•	•	•	•		
HRP/HRC/HRF75	75,0	•	•	•	•		
HRP/HRC/HRF87	87,0	•	•	•	•		
HRP/HRC/HRF99	99,0	•	•	•	•	•	
HRP/HRC/HRF112,5	112,5	•	•	•	•	•	
HRP/HRC/HRF120	120,0	•	•	•	•	•	•
HRP/HRC/HRF135	135,0	•	•	•	•	•	•
HRP/HRC/HRF150	150,0	•	•	•	•	•	•
HRP/HRC/HRF180	180,0	•	•	•	•	•	•

Designation	d_0	F_a	Load capacities if max. operating load ≤ F_a		Load capacities if max. operating load > F_a		Max length ltp	Root Ø d_2	Outside Ø d_1	M_s	I_s
			C_a	C_{oa}	C_a	C_{oa}					
	mm	kN	kN	kN	kN	kN	mm	mm	mm	kg/m	kgmm²/m
HRP/HRC/HRF60	60,0	90	544	1206	495	1206	4250	58,1	62,3	22,2	999 E1
HRP/HRC/HRF75	75,0	130	771	1855	643	1855	5500	73,1	77,3	34,7	244 E2
HRP/HRC/HRF87	87,0	180	979	2645	816	2645	6000	85,1	89,3	45,8	428 E2
HRP/HRC/HRF99	99,0	240	1231	3503	985	3503	7500	97,1	101,7	60,4	740 E2
HRP/HRC/HRF112,5	112,5	290	1425	4327	1140	4327	7500	110,6	115,2	76,8	120 E3
HRP/HRC/HRF120	120,0	320	1550	4635	1192	4635	8000	118,1	123,0	88,8	160 E3
HRP/HRC/HRF135	135,0	410	1847	6028	1421	6028	8000	133,1	138,0	113,3	261 E3
HRP/HRC/HRF150	150,0	480	2160	7182	1600	7182	7200	148,1	153,0	138,7	390 E3
HRP/HRC/HRF180	180,0	750	3017	11939	2235	11939	5000	178,1	183,0	199,8	809 E3

Dynamic and static loads are given for the 15 mm lead.
Root diameter is given for the 15 mm lead.
Outside diameter is given for the maximum lead.

Nota: Roller screw right hand unless specified
If there is a flange on the shaft, please contact SKF.

Special data for HRC

Designation	d_0	M_n	I_{nn}	I_{ns}
	mm	kg	kgmm²	kgmm²
HRC 60	60,0	9	187 E2	168 E1
HRC 75	75,0	16	517 E2	513 E1
HRC 87	87,0	26	111 E3	106 E2
HRC 99	99,0	40	220 E3	204 E2
HRC 112,5	112,5	58	423 E3	371 E2
HRC 120	120,0	64	516 E3	472 E2
HRC 135	135,0	108	118 E4	942 E2
HRC 150	150,0	163	235 E4	160 E3
HRC 180	180,0	440	108 E5	437 E3

Special data for HRF/HRP

Designation	d_0	M_n	I_{nn}	I_{ns}
	mm	kg	kgmm²	kgmm²
HRF/HRP 60	60,0	13	297 E2	168 E1
HRF/HRP 75	75,0	20	734 E2	513 E1
HRF/HRP 87	87,0	31	149 E3	106 E2
HRF/HRP 99	99,0	46	288 E3	204 E2
HRF/HRP 112,5	112,5	66	552 E3	371 E2
HRF/HRP 120	120,0	73	676 E3	472 E2
HRF/HRP 135	135,0	122	150 E4	942 E2
HRF/HRP 150	150,0	180	290 E4	160 E3
HRF/HRP 180	180,0	470	122 E5	437 E3

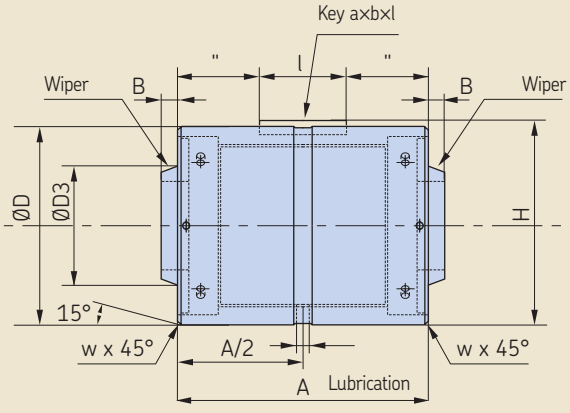

HRC

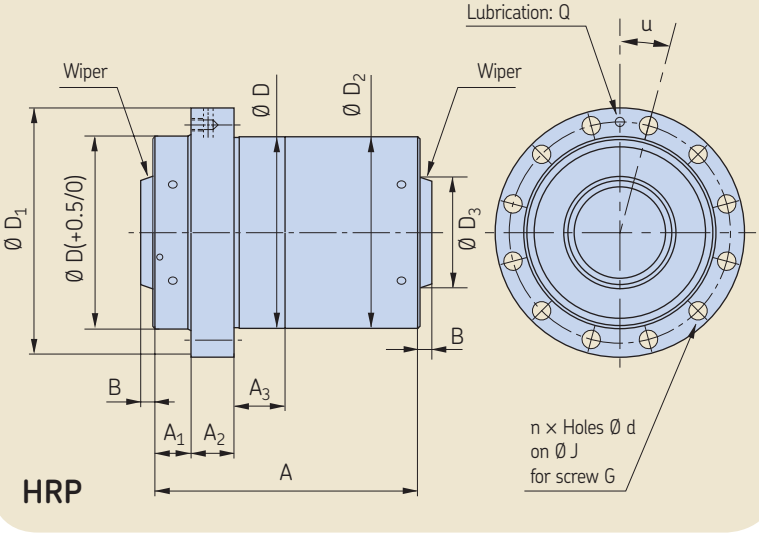

HRP

Designation					Nut							Flange							
	w x 45°	axbxl	H	Q'	D_3	D	A	A_1	A_3	B	Zn	D_1	A_2	Q	u	N	d	J	G
				mm	mm	g6		mm	mm	mm	cm^3	mm	mm	mm	°	n	mm	js12	
HRP/HRC/HRF60	1.0	10x8x56	125	11	71	122	171	25	40	9,0	90	166	30	M8x1	22,5	8	13,5	146	M12
HRP/HRC/HRF75	1.0	10x8x63	153	11	87	150	213	30	40	10,0	170	195	35	M8x1	15,0	12	13,5	174	M12
HRP/HRC/HRF87	1.5	12x8x100	178	12	103	175	245	35	40	12,0	270	220	40	M8x1	15,0	12	13,5	200	M12
HRP/HRC/HRF99	1.5	16x10x100	204	15	112	200	280	40	40	12,0	400	245	50	M8x1	15,0	12	13,5	224	M12
HRP/HRC/HRF112,5	1.5	16x10x100	234	15	140	230	300	50	40	12,0	550	286	50	M12x1,75	15,0	12	18,0	260	M16
HRP/HRC/HRF120	1.5	16x10x100	244	15	180	240	330	50	60	12,0	700	296	55	M12x1,75	15,0	12	18,0	270	M16
HRP/HRC/HRF135	2.0	28x16x120	286	15	180	280	370	60	80	11,5	980	345	60	M12x1,75	15,0	12	20,0	315	M18
HRP/HRC/HRF150	3.0	32x18x160	327	15	230	320	412	65	80	12,5	1350	385	70	M12x1,75	15,0	12	20,0	355	M18
HRP/HRC/HRF180	3.0	32x18x160	407	20	250	390	558	96	100	15,0	2500	470	90	M12x1,75	15,0	12	24,0	433	M22

Nota: Flanges to customer design on request.

Electro-mechanical cylinders

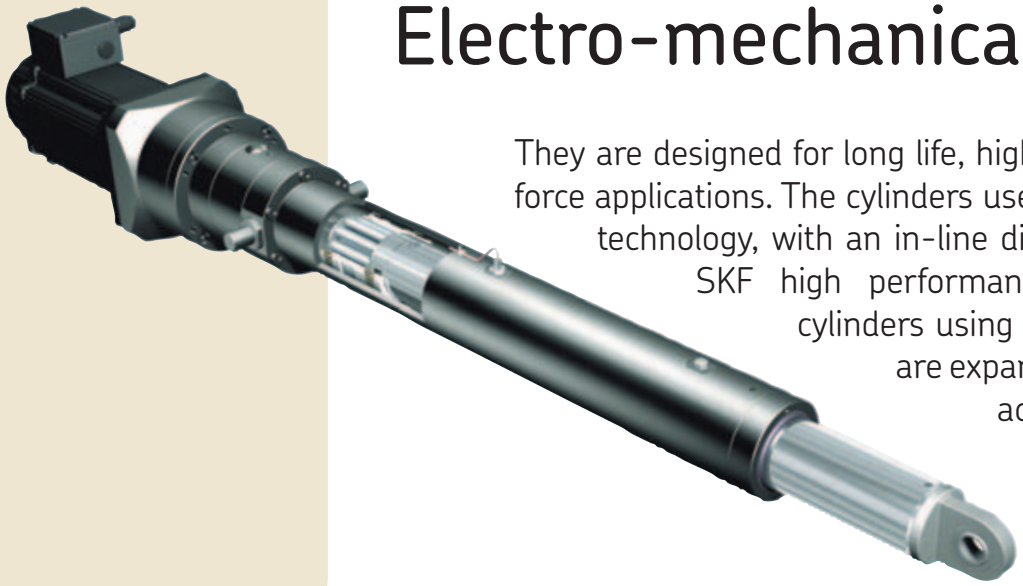

They are designed for long life, high acceleration and high force applications. The cylinders use brushless servomotor technology, with an in-line direct drive as standard. SKF high performance electro-mechanical cylinders using planetary roller screws are expanding the limits of linear actuators (see catalogue n° 5338).

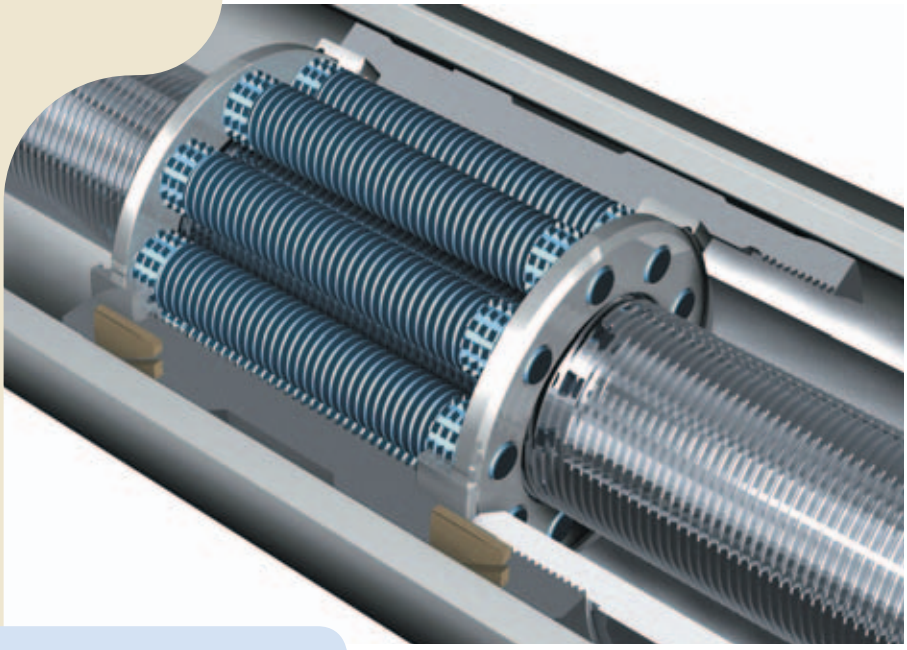

The roller screw converts rotary motion into linear movement.

The new Standard for high performance motion

Compact Electro-Mechanical Cylinders (CEMC) are designed to deliver the combination of a dynamic flexible actuation packaged with powerful performance.

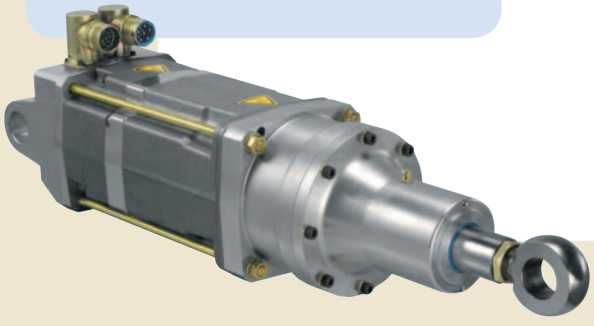

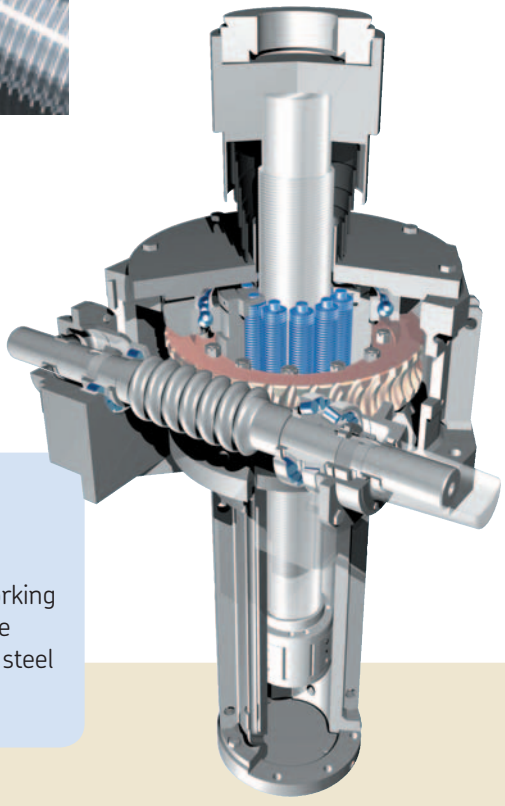

Cylinders for heavy loads

High loads and heavy working cycles: long life in adverse environments such as in steel industry.

Notes

Notes



SKF high efficiency screws are available from:

Australia

SKF Special Products Division
17-21 Stamford Road
OAKLEIGH (Melbourne),
Victoria 3166
Telephone: +61 3 9567 2800
Telefax: +61 3 9567 2869

Benelux

SKF Multitec Benelux B.V.
P.O. Box 2350 - Kelvinbaan 16
NL 3439 MT NIEUWEGEIN
Telephone: +31 30 60 29029
Telefax: +31 30 60 29028

Czech Republic

SKF Loziska A.S.
U měštanského pivovaru 7
Poštovni schránka 19
CZ - 170 04 PRAHA 7 - Holešovice
Telephone: +420 234 642 111
Telefax: +420 234 642 415

Danmark

SKF Multitec
Magnoliavej 12C
5250 ODENSE SV
Telephone: +45 65 92 77 77
Telefax: +45 65 92 74 77

Deutschland

SKF Linearsysteme GmbH
Vertrieb Deutschland
Paris-Straße 1
D - 97424 Schweinfurt
Telephone: +49 9721 657-0
Telefax: +49 9721 657-111

España

SKF Productos Industriales, S.A.
Pol. de l'Est - Cobalt, n°70
08940 Cornellà de Llobregat
ES - BARCELONA
Telephone: +34 93 377 99 77
Telefax: +34 93 474 20 39

France

SKF Equipements
BP 83
F - 78180 MONTIGNY-LE-BRE-TONNEUX
Telephone: +33 1 30 12 73 00
Telefax: +33 1 30 12 69 09

Hungary

SKF Svéd Golyóscsapágy
PF 52 - Csata u. 25
HU - 2040 BUDAORS
Telephone: +36 23 445 200
Telefax: +36 23 445 201

India

Skefko India Bearing Company Ltd
P.O. Box 2202
BOMBAY, 400 002
Telephone: +91 22 201 3567
Telefax: +91 22 208 9074

Italia

SKF Multitec S.p.A.
Corso Giulio Cesare, 424/29
10156 Torino
Telephone: +39 011 22 49 01
Telefax: +39 011 22 49 233

Japan

SKF Japan Ltd
1-9-1 Shiba Daimon,
Minato-ku,
Tokyo 105-0012 JAPAN
Telephone: +81 3 3436 4129
Telefax: +81 3 3578 1014

New Zealand

SKF New Zealand Ltd
P.O. Box 58-549
Greenmount, East Tamaki
AUCKLAND 1701
Telephone: +64 9 274 0056
Telefax: +64 9 274 5175

Norge

SKF Multitec AS
Postboks 7, Lindeberg Gärd
N-1007 OSLO 10
Telephone: +47 22 30 71 70
Telefax: +47 22 30 28 14

North America

SKF Motion Technologies
1530 Valley Center Parkway
USA - BETHLEHEM, PA 18017
Telephone: +1 610 861 4800
Telefax: +1 610 861 3716

Österreich

SKF Österreich AG
Triester Str. 14
AT - 2351 Wr. NEUDORF
Telephone: +43 2236 6709 0
Telefax: +43 2236 6709 220

Portugal

Sociedade SKF Limitada
Praça da Alegria, 66-A
P - 1200 LISBOA
Telephone: +351 1 424 7000
Telefax: +351 1 417 3649

Republic of South Africa

SKF South Africa (Pty) Ltd
P.O. Box 13157
SA - WITFIELD 1467
Telephone: +27 11 821 3542
Telefax: +27 11 821 3505

Schweiz/Suisse

SKF Schweiz
Eschenstrasse 5
CH - 8603 SCHWERZENBACH
Telephone: +41 44 825 81 81
Telefax: +41 44 825 82 82

Suomi / Finland

SKF Multitec
PL 60 - Luomannotko 3
FIN-02201 ESBO
Telephone: +358 94 52 97 52
Telefax: +358 94 12 77 65

Sverige

SKF Multitec
Box 22 248 - Ekslingan 3
S - 250 24 HELSINGBORG
Telephone: +46 42 25 35 00
Telefax: +46 42 25 35 45/46

United Kingdom

SKF Engineering Products Limited
Sundon Park Road
Luton
Bedfordshire LU3 3BL
Telephone: +44 1582 496795
Telefax: +44 1582 496574

Calculation formulas

1. Dynamic load rating (N) and Basic life rating

$$L_{10} = \left(\frac{C_a}{F_m}\right)^3 \text{ or } C_{req} = F_m (L_{10})^{1/3}_{req}$$

L_{10} = life (million of revolutions)
C_a = basic dynamic load rating
C_{req} = required dynamic load rating
F_m = cubic mean load (N)

2. Cubic mean load (N)

$$F_m = \frac{(F_1^3 L_1 + F_2^3 L_2 + F_3^3 L_3 + \quad)^{1/3}}{(L_1 + L_2 + L_3 + \quad)^{1/3}}$$

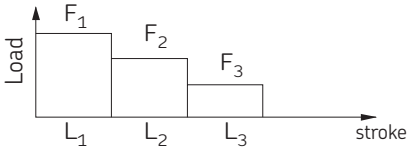

$$F_m = \frac{F_{min} + 2F_{max}}{3}$$

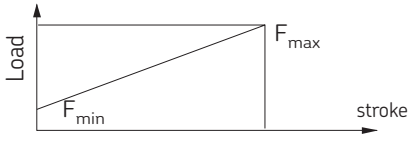

3. Critical speed of screw shaft (no safety factor) (rpm)
(a factor of 0,8 *is generally recommended)*

$$n_{cr} = 490 \cdot 10^5 \cdot \frac{f_1 d_2}{l^2}$$

d_2 = root diameter of the shaft (mm)
l = free length, or distance between the two support bearings (see page 19)
f_1 = 0,9 fixed, free
3,8 fixed, supported
5,6 fixed, fixed

4. Speed limit of the mechanism
(maxi speed applied through very short periods)

$n \times d_0 <$ 30 000 for SV/PV ≤ 25
< 20 000 for SV/PV > 25
< 160 000 for SR/TR/PR HRC/HRP/HRF

n = revolutions per minute
d_0 = screw shaft nominal diameter

5. Buckling strength (with a safety factor: 3) (N)

$$F_c = \frac{34000 \cdot f_3 \cdot d_2^4}{l^2}$$

d_2 = root diameter (mm)
l = free length, or distance between the two support bearings (see page 19)
f_3 = mounting correction factor
0,25 fixed, free
1 supported, supported
2 fixed, supported
4 fixed, fixed

6. Theoretical efficiency

- direct (η)

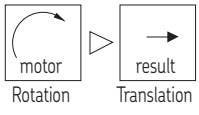

$$\eta = \frac{1}{1 + \frac{\pi \cdot d_0}{P_h}\mu}$$

- indirect (η')

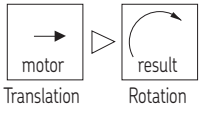

$$\eta' = 2 - \frac{1}{\eta}$$

μ = 0,010 for $\alpha \leq 7°$
μ = 0,007. α - 0,04 for $\alpha > 7°$
α = helix angle
d_0 = nominal diameter of screw shaft
P_h = lead (mm)

7. Practical efficiency (η_p)

$$\eta_p = \eta \cdot 0{,}9$$

The value 0,9 used is an average value between the practical efficiency of a new screw and that of a properly run in screw. It should be used for industrial applications in all normal working conditions.
For extreme cases, call us.

Calculation formulas

8. Input torque in a steady state (Nm)

$$T = \frac{F \cdot P_h}{2000. \ .\eta_p}$$

9. Power required in a steady state (W)

$$P = \frac{F.n.P_h}{60000.\eta_p}$$

10. Preload torque (Nm)

$$T_{pr} = \frac{F_{pr}.P_h}{1000.} \left(\frac{1}{\eta_p} - 1 \right)$$

11. Rigidity (N/µm)

$$\frac{1}{R_t} = \frac{1}{R_s} + \frac{1}{R_n}$$

$$R_s = 165 \ \frac{{d_2}^2}{l}$$

$$R_s = \frac{165 \ {d_2}^2 \ l}{l_2 \ (l - l_2)}$$

12. Restraining torque (Nm)
(considering system backdriving)

$$T_B = \frac{F.P_h.\eta'}{2000.}$$

13. Nominal motor torque when accelerating (Nm)

For a horizontal screw

$$T_t = T_f + T_{pr} + \frac{P_h \left[F + m_L.\mu_f.g \right]}{2000. \ .\eta_p} + \dot{\omega} \pi l$$

For a vertical screw

$$T_t = T_f + T_{pr} + \frac{P_h \left[F + m_L.g \right]}{2000. \ .\eta_p} + \dot{\omega} \pi l$$

14. Nominal braking torque when decelerating (Nm)

For a horizontal screw

$$T'_t = T_f + T_{pr} + \frac{P_h.\eta'.\left[F + m_L.\mu_f.g \right]}{2000.} + \dot{\omega} \pi l$$

For a vertical screw

$$T_t = T_f + T_{pr} + \frac{P_h.\eta'.\left[F + m_L.g \right]}{2000.} + \dot{\omega} \pi l$$

For additional information, please contact SKF

F = maximum load of the cycle (N)

n = revolutions per minute

F_{pr} = preload (N)

R_n = nut rigidity (see catalogue)

R_s = screw shaft rigidity (held at one end for standard steel)

R_s = screw shaft rigidity (held at each end, for standard steel)

R_t = total rigidity

l_2 = see page 20

F = load (N)
For safety, we can use the theoretical indirect efficiency

T_f = torque from friction in support bearings
T_{pr} = preload torque
μ_f = coefficient of friction
η_p = real direct efficiency
$\dot{\omega}$ = angular acceleration (rad/s^2)

$\Sigma I = I_M + I_L + I_S . \ l \ . \ 10^{-9}$

$I_L = m_L \left(\frac{P_h}{2\pi} \right)^2 10^{-6}$

η' = theoretical indirect efficiency

5

Symbols

C_{req}	N	Required load rating
C_a	kN	The dynamic load rating (L_{10} life) is such that 90 % of a sufficiently large sample of identical screws can be expected to attain or exceed 1 million revolutions under this constant centrally acting pure axial load without fatigue (flaking).
C_{oa}	kN	The static load rating is that axial constant centrally acting load which produces a total permanent deformation of one raceway and roller of 0,0001 of the diameter of the curved surface of the roller.
F	N	Axial load
F_c	N	Compression load
F_m	N	Constant mean axial load
F_{pr}	N	The preload force between a nut half (or nut) and the shaft
F_q	N	The squeeze load applied to two nut halves (or nuts) by the housing or fixing bolts
Hv	-	Vickers hardness
I	kgm^2	Inertia
I_L	kgm^2	Inertia of load
I_M	kgm^2	Inertia of motor
I_{nn}	kgm^2	Inertia of nut when turning nut
I_{ns}	kgm^2	Inertia of rollers when turning shaft
I_s	$kgmm^2/m$	Inertia of screw shaft per metre
L	10^6 revs	Life
L_{10}	10^6 revs	Basic life rating, millions of revolutions
L_{10h}	hours	Basic life rating, operating hours
M	µm	Maximum difference between mean travels of screws in a matched set
N	-	Number of thread starts on the screw shaft
N_r	-	Standard number of rollers
N_{max}	-	Maximum number of rollers
P	watts	Power
P_h	mm	Lead
R	N/µm	Rigidity
R_n	N/µm	Nut rigidity (including deflection of: • the nut body • rollers/nut contact • rollers/screw shaft contact • length of screw shaft in contact with rollers)
R_{ng}	N/µm	Minimum guaranteed nut rigidity (including deflection of: • the nut body • rollers/nut contact • rollers/screw shaft contact • length of screw shaft in contact with rollers)
R_{nr}	N/µm	Reference nut rigidity (including deflection of: • the nut body • rollers/nut contact • rollers/screw shaft contact • length of screw shaft in contact with rollers)
R_s	N/µm	Screw shaft rigidity
R_t	N/µm	Total rigidity
T	Nm	Torque
T_B	Nm	Brake torque
T_{dt}	Nm	Total torque at constant speed
T_f	Nm	Torque from friction in support bearings, motor, seals, etc
T_{pe}	Nm	Torque for play elimination
T_{pr}	Nm	Preload torque
T_{st}	Nm	Starting torque
T_t	Nm	Total torque
U	mm	Stroke length (life calculation)
V	hr^{-1}	Strokes per hour (life calculation)
W	hr/day	Hours per day (life calculation)
X	days/year	Days per year (life calculation)
Y	years	Years (life calculation)
Z_s	cc	Grease quantity for screw shaft
Z_n	cc	Grease quantity for nut

c	µm	Travel compensation - the difference between the specified travel and the nominal travel. Its value is always defined by the customer: if not specified it will be assumed to be zero. (The specified travel can also be defined by the specified lead multiplied by the number of revolutions).
d_o	mm	Nominal (diameter of screw shaft)
d_1	mm	Outside (diameter of screw shaft)
d_2	mm	Root (diameter of screw shaft)
d_b	mm	Bore (diameter of screw shaft)
e_p	µm	Tolerance of actual mean travel, l_m relative to specified travel l_s
f	-	Factors
g	m/s^2	Acceleration of gravity: 9,8
l	mm	Length
l_o	mm	Nominal travel - the nominal lead multiplied by the number of revolutions
l_1	mm	Threaded length
l_e	mm	Excess travel - at each end of the threaded length a distance le is subtracted to leave lu the useful travel. The specified lead precision does not apply to the lengths le . $l_u = l_1 - 2\,l_e$
l_m	mm	Actual mean travel. The curve is the result of measurements at 20°C of the screw shaft. lm is the line which fits the curve by the method of least squares
l_s	mm	Specified travel
l_{tp}	mm	Maximum total length
l_u	mm	Useful travel - the length of thread which is subject to the specified lead precision
m	kg	Mass
m_L	kg	Mass of the load
m_n	kg	Mass of the nut
m_s	kg/m	Mass of the screw shaft per metre
n	rpm	Rotational speed
n_{cr}	rpm	Critical speed
n_p	rpm	Maximum permissible speed
s_{ap}	mm	Maximum axial play
t	µm	Manufacturing tolerance
v	µm	Travel variation - the bandwidth or the distance between the two straight lines parallel to the actual mean travel which enclose the curve
v_{300}	µm	The bandwidth over any 300 mm section of the useful travel. v_{300a} and v_{300p} are actual and permissible values
v_u	µm	The bandwidth over the useful travel. v_{ua} and v_{up} are actual and permissible values
δ	µm	Deflection
α	°	Helix angle of the screw shaft thread
λ	°	Friction angle ($\tan \lambda = \mu$)
µ	_	Coefficient of friction ($\tan \lambda = \mu$)
μ_{st}	_	Coefficient of friction when starting
μ_F	_	Coefficient of friction for bearing
σ	Mpa	Nominal axial stress
σ_p	Mpa	Real axial stress
σ_t	Mpa	Total stress
τ	Mpa	Nominal shear stress
τp	Mpa	Real shear stress
η	-	Theoretical direct efficiency
η'	-	Theoretical indirect efficiency
η_p	-	Real direct efficiency
η'_p	-	Real indirect efficiency
θ	°	Angle of twist
$\dot{\omega}$	rad/s^2	Angular acceleration
Ω	mm × rpm	Speed quotient, $n_p \times d_o$

Designation

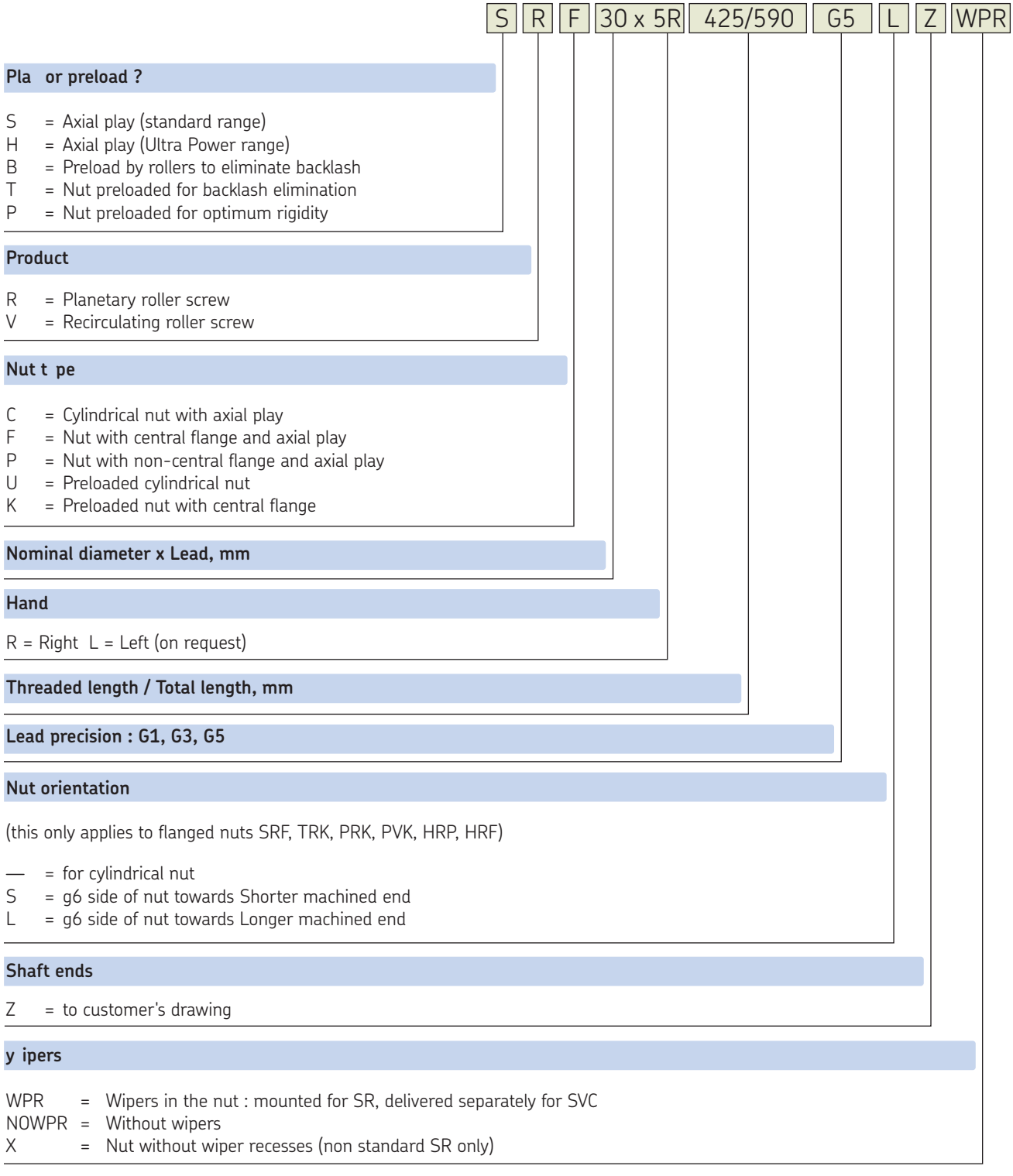

Linear Motion
Ball & Roller screws







Contacts

Linear motion from SKF
www.linearmotion.skf.com

Benelux
SKF Multitec Benelux B.V.
Nederland
Tel +31 030 6029 029
Fax +31 030 6029 028
België & Luxembourg
Tel +32 25 024 270
Fax +32 25 027 336
E-mail multitec_benelux@skf.com

Brasil
SKF do Brasil Ltda
Tel +55 11 461 991 114
Fax +55 11 461 991 99
E-mail marketing.skf@skf.com.br

Canada
SKF Canada Limited
Tel +1 416 299 1220
Fax +1 416 299 6548
E-mail www.marketing@skf.ca

Danmark
SKF Multitec
Tel +45 65 92 77 77
Fax +45 65 92 74 77
E-mail customerservice.multitec@skf.com

Deutschland & Österreich
SKF Linearsysteme GmbH
Tel +49 9721 657 232/233
Fax +49 9721 657 111
E-mail lin.sales@skf.com

España & Portugal
SKF Productos Industriales S.A.
Tel +34 93 377 99 07/-77
Fax +34 93 474 2039/-2156
E-mail prod.ind@skf.com

France
SKF Equipements
Tel +33 1 30 12 73 00
Fax +33 1 30 12 69 09
E-mail equipements.france@skf.com

Italia
SKF Multitec S.p.A.
Tel +39 011 22 49 01
Fax +39 011 22 49 233
E-mail multitec.italy@skf.com

Mexico
SKF de México S.A. de C.V
Tel +52 222 229 4900
Fax +52 222 229 4908
Web www.skf.com.mx

Norge
SKF Multitec
Tel +47 22 90 50 00
Fax +47 22 30 28 14
E-mail customerservice.multitec@skf.com

Schweiz
SKF LM&PT
Tel +41 44 825 81 81
Fax +41 44 825 82 82
E-mail skf.schweiz@skf.com

Suomi
SKF Multitec
Tel +358 9 615 00 850
Fax +358 9 615 00 851
E-mail multitec.nordic@skf.com

Sverige
SKF Multitec
Tel +46 42 253 500
Fax +46 42 253 545
E-mail customerservice.multitec@skf.com

U.K.
SKF (UK) Ltd.
Tel +44 1582 496 735
Fax +44 1582 496 574
E-mail a&mc.uk@skf.com

USA
SKF Motion Technologies
Tel +1 610 861 4800
Toll free +1 800 541 3624
Fax +1 610 861 3716
E-mail motiontech.usa@skf.com

Other countries
Fax +33 47 968 6800
E-mail brs@skf.com

Represented by:

SKF is a registered trademark of the SKF Group.

© SKF 2006
The contents of this publication are the copyright of the publisher and may not be reproduced (even extracts) unless prior written permission is granted. Every care has been taken to ensure the accuracy of the information contained in this publication but no liability can be accepted for any loss or damage whether direct, indirect or consequential arising out of the use of the information contained herein.

Publication **4351 EN** - 2006-10 Printed in France